SA4320

Flow sensor

SAEXXXXBFRKG/US-100

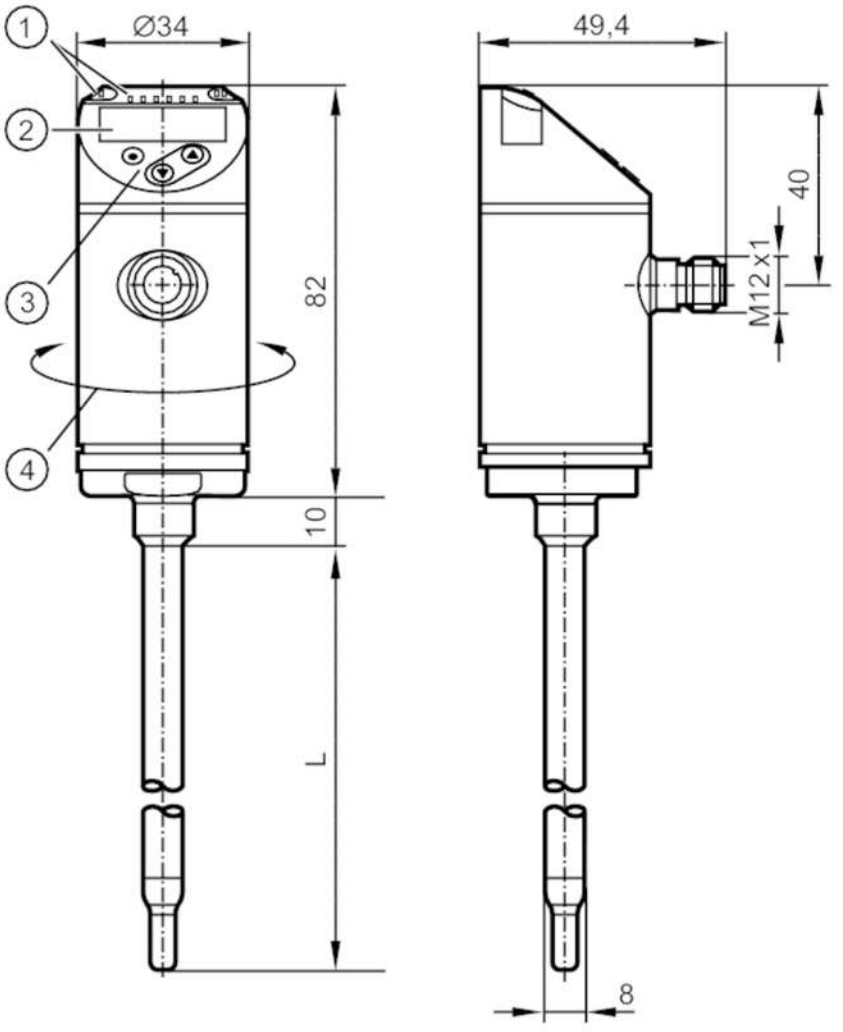

L 200 mm
1 LEDs Display unit / switching status
2 alphanumeric display 4-digit red/green
3 programming buttons
4 upper part of the housing can be rotated 345°

Product characteristics			
Number of inputs and outputs		Number of digital outputs: 2; Number of analogue outputs: 1	
Process connection		clamp adapter Ø 8 mm	
Application			
Special feature		Gold-plated contacts	
Installation		Recommended for pipe diameters; (15...400 mm)	
Media		air	
Medium temperature	[°C]	-20...100	
Pressure rating		50 bar	5 MPa
MAWP (for applications according to CRN)	[bar]	50	
Electrical data			
Operating voltage	[V]	18...30 DC; (to SELV/PELV)	

SA4320

Flow sensor

SAEXXXXBFRKG/US-100

Current consumption	[mA]	< 100
Protection class		III
Reverse polarity protection		yes
Power-on delay time	[s]	10
Measuring principle		calorimetric
Inputs / outputs		
Number of inputs and outputs		Number of digital outputs: 2; Number of analogue outputs: 1
Outputs		
Total number of outputs		2
Output signal		switching signal; analogue signal; frequency signal; IO-Link; (configurable)
Electrical design		PNP/NPN
Number of digital outputs		2
Output function		normally open / normally closed; (parameterisable)
Max. voltage drop switching output DC	[V]	2.5
Permanent current rating of switching output DC	[mA]	250
Number of analogue outputs		1
Analogue current output	[mA]	4...20; (scalable)
Max. load	[Ω]	350
Short-circuit protection		yes
Type of short-circuit protection		pulsed
Overload protection		yes
Frequency of the output	[Hz]	0...1000
Measuring/setting range		
Probe length L	[mm]	200
Operating mode		relative; absolutely gaseous; (absolute: reference measurement recommended; Factory setting: relative)
Display range	[m/s]	0...36
Resolution	[m/s]	0.2
Set point SP	[m/s]	2...30
Reset point rP	[m/s]	0.6...28.6
Analogue start point ASP	[m/s]	0...24
Analogue end point AEP	[m/s]	6...30
Frequency end point, FEP	[m/s]	6.6...30
Frequency at the end point FRP	[Hz]	100...1000
Gases - operating mode "absolute"		
Setting range	[m/s]	0...30
Greatest sensitivity	[m/s]	0.6...30
Gases - operating mode "relative"		
Setting range	[m/s]	0...60
Greatest sensitivity	[m/s]	0.6...30

SA4320

Flow sensor

SAEXXXXBFRKG/US-100

Temperature monitoring			
Measuring range	[°C]	-20...100	
Resolution	[°C]	0.2	
Accuracy / deviations			
Gases - operating mode "absolute"			
Repeatability		± (3 % MW + 0,6 % MEW)	
Gases - operating mode "relative"			
Accuracy		± (10 % MW + 2 % MEW); (reference conditions: DN50; Inside diameter 51 mm; within the range of maximum sensitivity: 20 °C / < 6 bar; Insertion depth: 15 mm; inlet pipe length: 2.5 m; standard velocity to DIN ISO 2533 at the sensor tip)	
Repeatability		± (3 % MW + 0,6 % MEW)	
Temperature monitoring			
Temperature drift		± 0,005 K/°C	
Accuracy	[K]	± 2 / + 8; (flow velocity > 20 % VMR and 20 °C: ± 2)	
Response times			
Response time	[s]	7	
Temperature monitoring			
Dynamic response T05 / T09	[s]	30 (T09); (flow velocity: ≥ 10 m/s)	
Software / programming			
Parameter setting options		hysteresis / window; normally open / normally closed; switching logic; current/ frequency output; medium selection; Damping; Teach function; display can be rotated and switched off; standard unit of measurement; process value colour	
Interfaces			
Communication interface		IO-Link	
Transmission type		COM2 (38,4 kBaud)	
IO-Link revision		1.1	
SDCI standard		IEC 61131-9	
Profiles		Smart Sensor: Process Data Variable; Device Identification, Device Diagnosis	
SIO mode		yes	
Required master port type		A	
Process data analogue		2	
Process data binary		2	
Min. process cycle time	[ms]	3	
Supported DeviceIDs		**Type of operation**	**DeviceID**
		Factory setting / ModE = (REL)	1237
		ModE = (ABS)	1238
Operating conditions			
Ambient temperature	[°C]	-40...80	
Storage temperature	[°C]	-40...100	
Protection		IP 65; IP 67	
Tests / approvals			
EMC		DIN EN 60947-5-9	
Shock resistance		DIN EN 60068-2-27	50 g (11 ms)
Vibration resistance		DIN EN 60068-2-6	2 g (10...2000 Hz)

SA4320

Flow sensor

SAEXXXXBFRKG/US-100

MTTF	[years]	131	
UL approval		UL Approval no.	I017
		File number UL	E174189

Mechanical data

Weight	[g]	343.8	
Housing		cylindrical	
Dimensions	[mm]	Ø 8 / L = 292	
Materials		stainless steel (316L/1.4404); PBT-GF20; PBT-GF30	
Materials (wetted parts)		stainless steel (316L/1.4404)	
Process connection		clamp adapter Ø 8 mm	

Displays / operating elements

Display		Display unit	6 x LED, green (%, m/s, l/min, m³/h, °C, 10³)
		switching status	2 x LED, yellow
		measured values	alphanumeric display, red/green 4-digit

Remarks

Remarks	MW = measured value
	MEW = Final value of the measuring range
Pack quantity	1 pcs.

Electrical connection

Connector: 1 x M12; coding: A; Contacts: gold-plated



SA4320

Flow sensor

SAEXXXXBFRKG/US-100

Connection

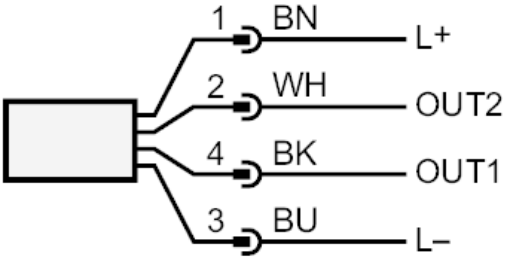

	colours to DIN EN 60947-5-2
OUT1:	
-	switching output volumetric flow quantity monitoring
-	frequency output volumetric flow quantity monitoring
-	IO-Link
OUT2:	
-	switching output volumetric flow quantity monitoring
-	switching output Temperature monitoring
-	analogue output volumetric flow quantity monitoring
-	analogue output Temperature monitoring
-	frequency output volumetric flow quantity monitoring
-	frequency output Temperature monitoring
-	input External Teach
	Core colours :
BK =	black
BN =	brown
BU =	blue
WH =	white