E74100

AS-Interface flat cable

Flat cable 100 meter PUR ye

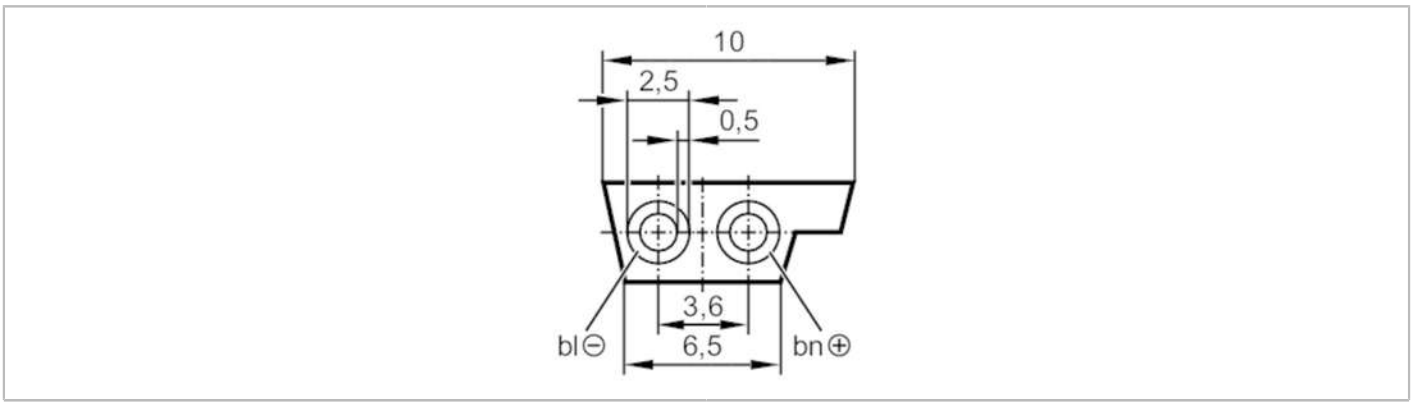

Application		
Special feature		Halogen-free
Design		for use of insulation displacement technology
Electrical data		
Operating voltage	[V]	26.5...31.6 DC
Operating conditions		
Ambient temperature	[°C]	-40...85
Mechanical data		
Weight	[g]	6598
Remarks		
Remarks		100 m form supplied: coiled
Pack quantity		100 m
Electrical connection		
Cable: 100 m, PUR, Halogen-free, yellow; 2 x 1.5 mm²		