Pressure transmitter Model S–20
Type S–20
Item no.: 46846831

MEASURING RANGE	
Measuring range	0...40 bar gauge
Overpressure limit	2 times
Vacuum tightness	yes
OUTPUT SIGNAL	
Output signal	4...20 mA, 2-wire
Permissible load in Ω	≤ (power supply - 7.5 V) / 0.023 A
POWER SUPPLY	
Power supply	DC 8...35 V
Total current consumption	Current signal, max. 25 mA
ACCURACY INFORMATION	
Non-linearity	0.25% BFSL
Accuracy at calibration temperature	≤ ±0.5 % of span
Long-term drift	≤ ±0.1 % of span
without additional error at calibration temperature	yes
TEMPERATURE ERROR	
Temperature error -20 ... +80°C	1 %
Temperature error -30 ... +100°C	1.5 %
OPERATING ENVIRONMENT CONDITIONS	
Permissible medium temperature	-40...+125°C
Storage and transport temperature	-40 ... +70°C
shock and vibration resistance	100 g shock, 20 g vibration
Service life	100 million load cycle
PROCESS CONNECTION	
Process connection	G 1/4 B EN 837
Sealing	copper
ELECTRICAL CONNECTION	
Electrical connection	angular connector DIN 175301-803 A
Tailoring electrical connection	mating connector included
Ingress protection	IP 65
pin assignment el. connection	U+=1, U-=2
	-30 ... +100 °C (-22 ... +212 °F)
item based datasheet headlines	ELECTRICAL SAFETY
Short-circuit resistance	S+ vs. U-
Reverse polarity protection	U+ vs. U-
Insulation voltage	DC 750 V
CE-CONFORMITY, APPROVALS AND CERTIFICATES	
CE conformity	PED 2014/65/EU
CE conformity2	EMC 2014/30/EU
CE-Konformität Teil3	RoHS 2011/65/EU
Approvals	cULus

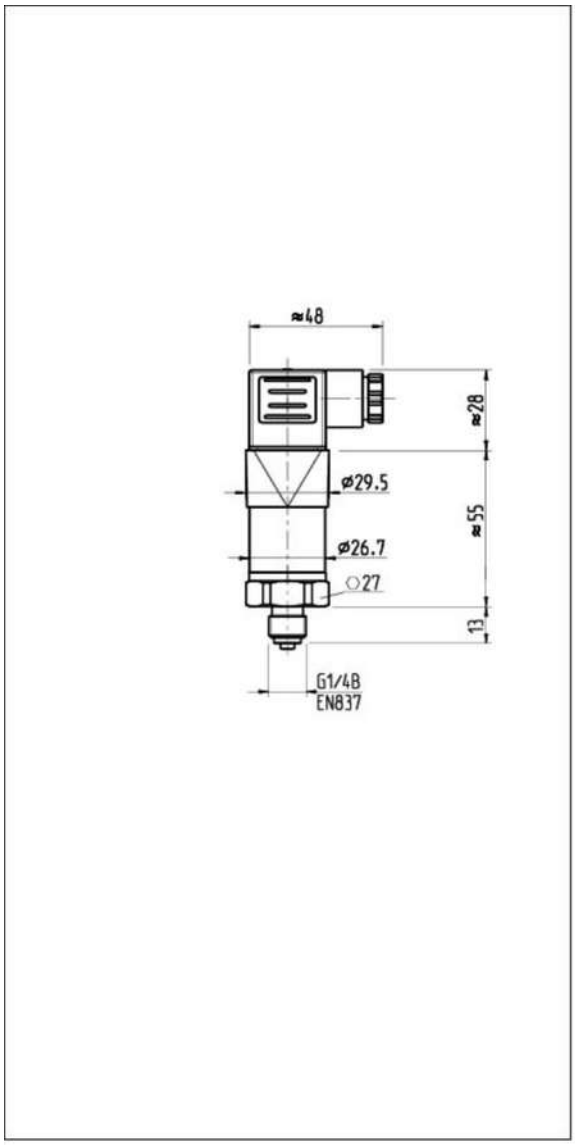

WIKA Instruments – 38 Avenue du Gros Chêne – 95220 HERBLAY
Phone0 820 95 10 10
info_fr@wika.com • http://www.wika.fr