DATASHEET - M22S-ST-F67



Similar to illustration

Carrier, +label, DEFAUT

Part no.	**M22S-ST-F67**
Catalog No.	**256795**
Alternate Catalog No.	**M22S-ST-F67Q**

Delivery program

Product range			Accessories
Basic function accessories			Legend holder
			Complete
Width		mm	30
Height		mm	50
Design			Round
Colour			
			Black
RAL Value			RAL 9005
Inscription			DÉFAUT
Degree of Protection			IP66
Connection to SmartWire-DT			no

Technical data

General

Degree of Protection			IP66
Ambient temperature			
Open		°C	-25 - +70

Design verification as per IEC/EN 61439

Technical data for design verification			
Rated operational current for specified heat dissipation	I_n	A	0
Heat dissipation per pole, current-dependent	P_{vid}	W	0
Equipment heat dissipation, current-dependent	P_{vid}	W	0
Static heat dissipation, non-current-dependent	P_{vs}	W	0
Heat dissipation capacity	P_{diss}	W	0
Operating ambient temperature min.		°C	-25
Operating ambient temperature max.		°C	70
IEC/EN 61439 design verification			
10.2 Strength of materials and parts			
10.2.2 Corrosion resistance			Meets the product standard's requirements.
10.2.3.1 Verification of thermal stability of enclosures			Meets the product standard's requirements.
10.2.3.2 Verification of resistance of insulating materials to normal heat			Meets the product standard's requirements.
10.2.3.3 Verification of resistance of insulating materials to abnormal heat and fire due to internal electric effects			Meets the product standard's requirements.
10.2.4 Resistance to ultra-violet (UV) radiation			Please enquire
10.2.5 Lifting			Does not apply, since the entire switchgear needs to be evaluated.
10.2.6 Mechanical impact			Does not apply, since the entire switchgear needs to be evaluated.
10.2.7 Inscriptions			Meets the product standard's requirements.
10.3 Degree of protection of ASSEMBLIES			Does not apply, since the entire switchgear needs to be evaluated.
10.4 Clearances and creepage distances			Meets the product standard's requirements.
10.5 Protection against electric shock			Does not apply, since the entire switchgear needs to be evaluated.
10.6 Incorporation of switching devices and components			Does not apply, since the entire switchgear needs to be evaluated.

10.7 Internal electrical circuits and connections			Is the panel builder's responsibility.
10.8 Connections for external conductors			Is the panel builder's responsibility.
10.9 Insulation properties			
10.9.2 Power-frequency electric strength			Is the panel builder's responsibility.
10.9.3 Impulse withstand voltage			Is the panel builder's responsibility.
10.9.4 Testing of enclosures made of insulating material			Is the panel builder's responsibility.
10.10 Temperature rise			Not applicable.
10.11 Short-circuit rating			Is the panel builder's responsibility. The specifications for the switchgear must be observed.
10.12 Electromagnetic compatibility			Is the panel builder's responsibility. The specifications for the switchgear must be observed.
10.13 Mechanical function			The device meets the requirements, provided the information in the instruction leaflet (IL) is observed.

Technical data ETIM 7.0

Low-voltage industrial components (EG000017) / Text plate holder for control circuit devices (EC001032)

Electric engineering, automation, process control engineering / Low-voltage switch technology / Command and alarm device / Sign carrier for command devices (ecl@ss10.0.1-27-37-12-29 [AKF047014])

Width		mm	30
Height		mm	50
Hole diameter		mm	22.5
Width opening		mm	0
Height opening		mm	0
Colour			Black
Shape			Rectangular

Approvals

North America Certification			UL/CSA certification not required

Dimensions

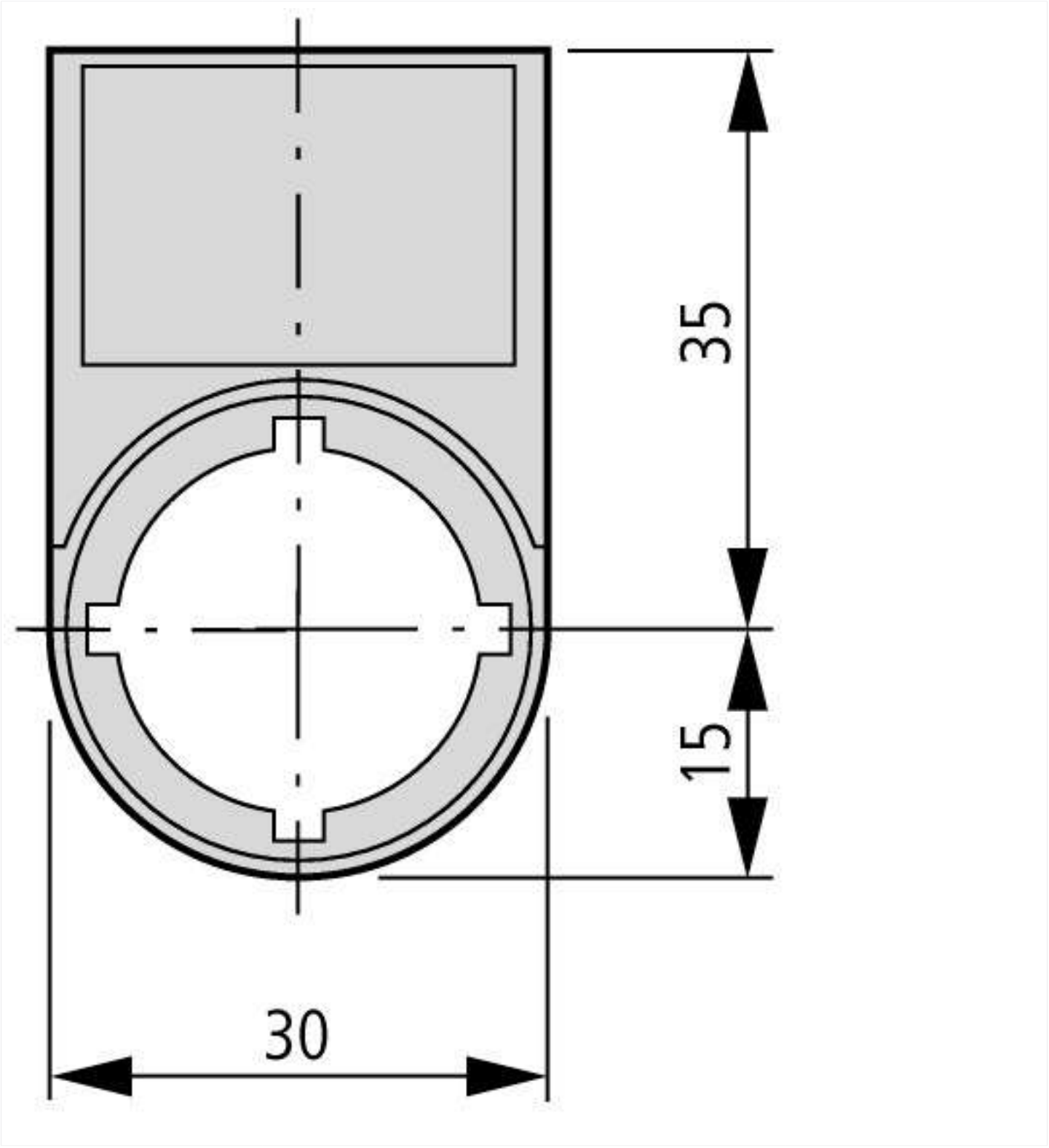

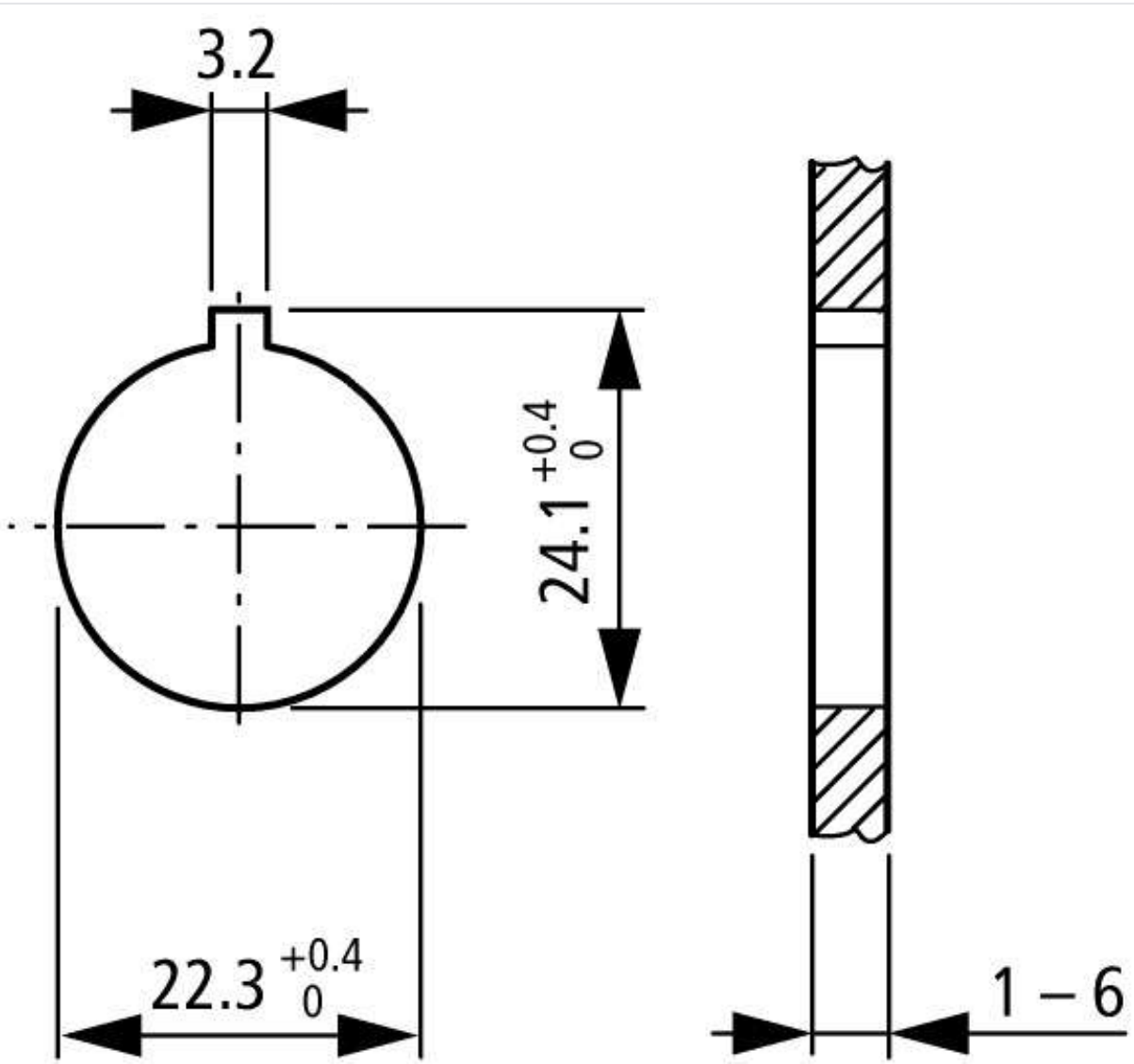

Mounting hole with lug slot

Actuating and indicator elements

© 05/2021 by Eaton Industries GmbH