PPS1 BP - Aluminium tapping flange for pipe



Description	
Reference	**For pipe OD (mm)**
PPS1 BP2516	16
PPS1 BP2520	20
PPS1 BP3216	16
PPS1 BP3220	20

Prevost UK LTD - Unit G, Tower Business Park - Commercial Road - BB3 OFJ Darwen - Lancashire - United kingdom
Phone. (+44) 01254 873 389 -sales@prevost-ltd.co.uk - www.prevost.eu

Reference	For pipe OD (mm)
PPS1 BP4016	16
PPS1 BP4020	20
PPS1 BP4025	25
PPS1 BP5016	16
PPS1 BP5020	20
PPS1 BP5025	25
PPS1 BP6320	20
PPS1 BP6325	25
PPS1 BP6332	32
PPS1 BP8020	20
PPS1 BP8025	25
PPS1 BP8032	32
PPS1 BP10025	25

Reference	For pipe OD (mm)
PPS1 BP10032	32

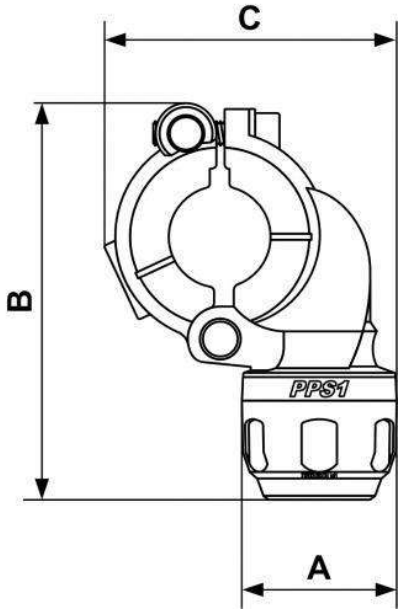

Dimensions			
Reference	**A mm**	**B mm**	**C mm**
PPS1 BP2516	32	94	70
PPS1 BP2520	38	98	72
PPS1 BP3216	32	94	70
PPS1 BP3220	38	98	72
PPS1 BP4016	32	122	102

Reference	A mm	B mm	C mm
PPS1 BP4020	38	127	102
PPS1 BP4025	46	130	103
PPS1 BP5016	32	122	102
PPS1 BP5020	38	127	102
PPS1 BP5025	46	130	103
PPS1 BP6320	38	163	147
PPS1 BP6325	46	167	147
PPS1 BP6332	57	165	147
PPS1 BP8020	38	163	147
PPS1 BP8025	46	167	147
PPS1 BP8032	57	165	147
PPS1 BP10025	159	200	
PPS1 BP10032	159	215	