Actuator range



® SKF is a registered trademark of the SKF Group.

© SKF Group 2011
The contents of this publication are the copyright of the publisher and may not be reproduced (even extracts) unless prior written permission is granted. Every care has been taken to ensure the accuracy of the information contained in this publication but no liability can be accepted for any loss or damage whether direct, indirect or consequential arising out of the use of the information contained herein.

PUB MT/P1 10060 EN · January 2011

This publication supersedes publication 5322.

Printed in Sweden on environmentally friendly paper.

Principles of actuator and pillar selection and application 9

Telescopic pillars. 37

Linear actuators 107

Rotary actuators. 289

Control units. 301

Hand, foot and desk switches 331

Customized projects 355

Drive by wire 365

Spare parts 371

Contents

Foreword 4

SKF – the knowledge engineering company 6

1 Principles of actuator and pillar selection and application 9
Linear actuator definition & type 10
Definition 10
Ball screw vs acme screw 11
Performance considerations 11
Limit switch 11
Hall sensors 11
Potentiometer 11
Friction clutch 11
Ball detent clutch 11
Back-up nut 11
Slip-stick effect 11
Selection criteria 12
Force 12
Load capacity 12
Speed 12
Stroke and retracted length 12
Calculations 13
Duty cycle and duty factor 13
Lifetime calculation 13
Application checklist 14
Typical applications 15
Selection guide 16

2 Telescopic pillars 37
AC versions
TLC 38
TFG 42
THC 46
TXG 50
TGC 54
DC versions
CPI 60
TLG 64
TLT 68
TFG 72
THG 76
CAWA 80
TXG 84
TMA 88
TMD 92
No motor
FRE 98
TMS 102

3 Linear actuators 107
AC versions
SLS 110
SKS/SKA 114
SKD 118
STD 122
STW 126
MATRIX 6 130
CAR 40 134
CAHB–31 138
SJ 142
DSP 146
CAP 32 150
CAR 32 154
CAT 32B 158
CAT 33 162
WSP 166
CAHB–30 170
CAT 33H 174
DC versions
SKG 180
STG 184
RU 188
MATRIX 3 192
CAR 40 196
ECOMAG 200
FD 204
Magdrive 208
CAHB–21 212
ASM 216
CAP 43B 220
CAT 32B 224
MATRIX 1 228
CAR 32 232
CAP 32 236
CAP 43A 240
CAT 33 244
CAHB–20 248
CARE 33 252
CAR 22 256
CAT 33H 260
CAHB–10 264
CALA 36A 268
CAT 21B 272
No motor
CARN 32 280
CCBR 32 284

4 Rotary actuators **289**
CRAB 17. 290
CRAB 05. 296

5 Control units **301**
SCU 302
VCU 306
BCU 310
CB 314
MCU 316
LD 318
CAED ANR 322
CAED 324
CAEV 326

6 Accessories **331**
Hand switches
EHA 1 332
EHA 3 334
EHE 336
HS 338
PHC 340
CAES 342
Foot switches
ST. 344
PFP 346
Desk switches
ST. 348
LD 350
PAM 352

7 Customized projects only. **355**
Rotary actuators. 356
CEMC actuator series 358
SRSA actuator series 362

8 Drive by wire **365**
EPB 366

9 Spare parts **371**

Foreword

The SKF brand now stands for more than ever before, and means more to you as a valued customer.

While SKF maintains its leadership as the hallmark of quality bearings throughout the world, new dimensions in technical advances, product support and services have evolved SKF into a truly solutions-oriented supplier, creating greater value for customers.

These solutions encompass ways to bring greater productivity to customers, not only with breakthrough application-specific products, but also through leading-edge design simulation tools and consultancy services, plant asset efficiency maintenance programmes, and the industry's most advanced supply management techniques.

The SKF brand still stands for the very best in rolling bearings, but it now stands for much more.

SKF – the knowledge engineering company

This publication provides information on all the SKF Actuation System products with clear tables to help the customer select and order the right product.

Structure of the catalogue

This catalogue is divided into nine main chapters, marked with numbered blue tabs in the right margin:

- Chapter 1 provides technical and application recommendations.
- Chapter 2 describes the different telescopic pillars.
- Chapter 3 presents the linear actuator series.
- Chapter 4 displays data about rotary actuators.
- Chapter 5 and 6 contain information about control units and accessories.
- Chapter 7 gives a brief description of products dedicated to project sales.
- Chapter 8 introduces the Electronic Parking Brake by Drive by Wire.
- Chapter 9 lists the different spare parts and accessories.

About the data in this catalogue

The data in this catalogue relate to SKF's state-of-the-art technology and production capabilities as of 2010. The data may differ from that presented in earlier catalogues because of redesign, technological developments, or revised methods of calculation. SKF reserves the right to make continuing improvements to SKF products regarding materials, design and manufacturing methods, as well as changes necessitated by technological developments.

How to use this catalogue

Each product is introduced by providing information such as technical data, dimensional drawings or connecting diagrams, in order to make it easy to select the right product.

At the end of each product information section, an ordering key is shown.

To determine the product code to be used on the order, examine the relevant pages containing the main data and prepare the order code. This may consist of pre-set options, ordering key boxes already filled in (for example: type, color, etc.) and options that can be selected from several empty boxes (for example: voltage and stroke length). In the ordering key, the options are set out under the associated subjects, with the code or the information to be entered indicated along with the measurement restrictions contained in the associated tables. The sequence of the ordering key is defined by the thin guiding lines that select the corresponding box. The individual ordering key may contain indications or special notes.

For the CAT series, the selection of the item's dynamic load/speed and motor option should be made by use of an additional table with several options located above the ordering key.

An example is given below to show how to prepare the order code for a MAX 6 linear actuator.

NOTE: See product specific catalogues at www.actuators.skf.com for more complete information and descriptions of the various products briefly described in this catalogue.

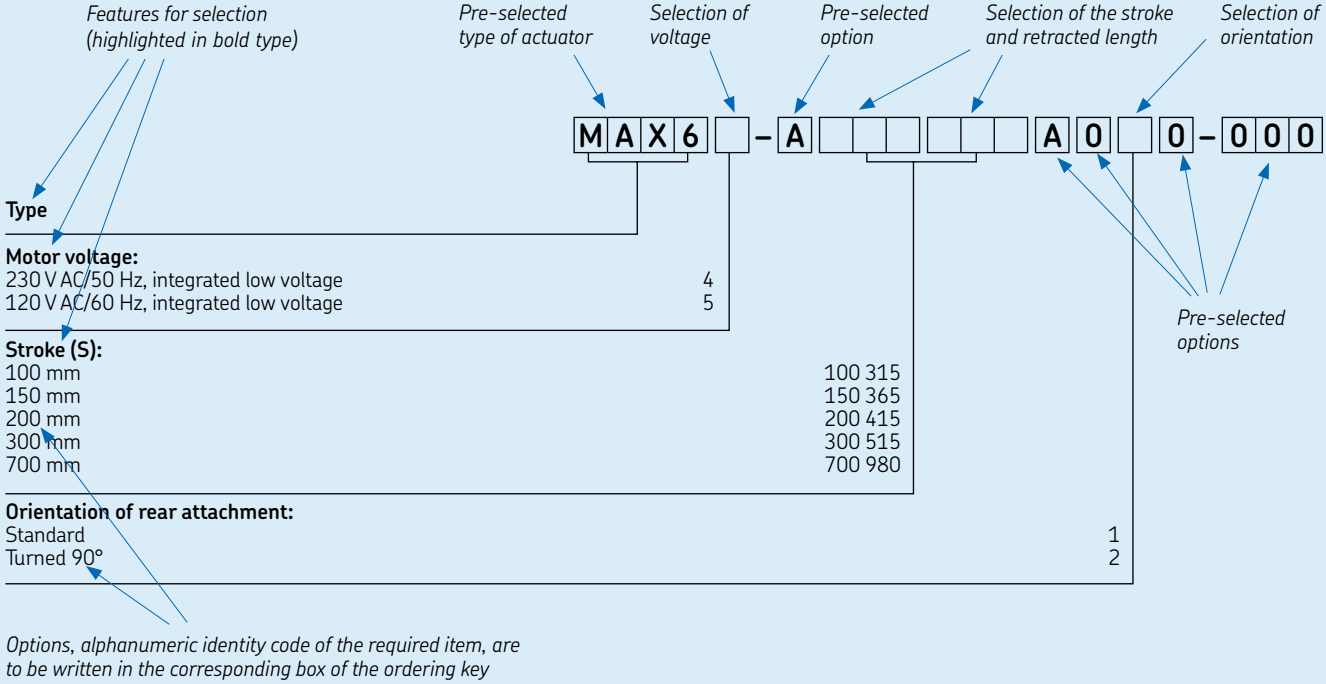

SKF – the knowledge engineering company

From the company that invented the self-aligning ball bearing more than 100 years ago, SKF has evolved into a knowledge engineering company that is able to draw on five technology platforms to create unique solutions for its customers. These platforms include bearings, bearing units and seals, of course, but extend to other areas including: lubricants and lubrication systems, critical for long bearing life in many applications; mechatronics that combine mechanical and electronics knowledge into systems for more effective linear motion and sensorized solutions; and a full range of services, from design and logistics support to condition monitoring and reliability systems.

Though the scope has broadened, SKF continues to maintain the world's leadership in the design, manufacture and marketing of rolling bearings, as well as complementary products such as radial seals. SKF also holds an increasingly important position in the market for linear motion products, high-precision aerospace bearings, machine tool spindles and plant maintenance services.

The SKF Group is globally certified to ISO 14001, the international standard for environmental management, as well as OHSAS 18001, the health and safety management standard. Individual divisions have been approved for quality certification in accordance with ISO 9001 and other customer specific requirements.

With over 100 manufacturing sites worldwide and sales companies in 70 countries, SKF is a truly international corporation. In addition, our distributors and dealers in some 15 000 locations around the world, an e-business marketplace and a global distribution system put SKF close to customers for the supply of both products and services. In essence, SKF solutions are available wherever and whenever customers need them. Overall, the SKF brand and the corporation are stronger than ever. As the knowledge engineering company, we stand ready to serve you with world-class product competencies, intellectual resources, and the vision to help you succeed.



© Airbus – photo: exm company, H. Goussé

Evolving by-wire technology
SKF has a unique expertise in the fast-growing by-wire technology, from fly-by-wire, to drive-by-wire, to work-by-wire. SKF pioneered practical fly-by-wire technology and is a close working partner with all aerospace industry leaders. As an example, virtually all aircraft of the Airbus design use SKF by-wire systems for cockpit flight control.

SKF is also a leader in automotive by-wire technology, and has partnered with automotive engineers to develop two concept cars, which employ SKF mechatronics for steering and braking. Further by-wire development has led SKF to produce an all-electric forklift truck, which uses mechatronics rather than hydraulics for all controls.

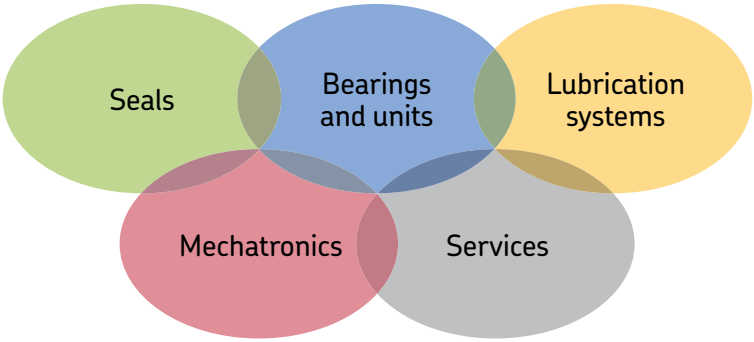





Harnessing wind power
The growing industry of wind-generated electric power provides a source of clean, green electricity. SKF is working closely with global industry leaders to develop efficient and trouble-free turbines, providing a wide range of large, highly specialized bearings and condition monitoring systems to extend equipment life of wind farms located in even the most remote and inhospitable environments.



Working in extreme environments
In frigid winters, especially in northern countries, extreme sub-zero temperatures can cause bearings in railway axleboxes to seize due to lubrication starvation. SKF created a new family of synthetic lubricants formulated to retain their lubrication viscosity even at these extreme temperatures. SKF knowledge enables manufacturers and end user customers to overcome the performance issues resulting from extreme temperatures, whether hot or cold. For example, SKF products are at work in diverse environments such as baking ovens and instant freezing in food processing plants.



Developing a cleaner cleaner
The electric motor and its bearings are the heart of many household appliances. SKF works closely with appliance manufacturers to improve their products' performance, cut costs, reduce weight, and reduce energy consumption. A recent example of this cooperation is a new generation of vacuum cleaners with substantially more suction. SKF knowledge in the area of small bearing technology is also applied to manufacturers of power tools and office equipment.



Maintaining a 350 km/h R&D lab
In addition to SKF's renowned research and development facilities in Europe and the United States, Formula One car racing provides a unique environment for SKF to push the limits of bearing technology. For over 60 years, SKF products, engineering and knowledge have helped make Scuderia Ferrari a formidable force in F1 racing. (The average racing Ferrari utilizes around 150 SKF components.) Lessons learned here are applied to the products we provide to automakers and the aftermarket worldwide.



Delivering Asset Efficiency Optimization
Through SKF Reliability Systems, SKF provides a comprehensive range of asset efficiency products and services, from condition monitoring hardware and software to maintenance strategies, engineering assistance and machine reliability programmes. To optimize efficiency and boost productivity, some industrial facilities opt for an Integrated Maintenance Solution, in which SKF delivers all services under one fixed-fee, performance-based contract.



Planning for sustainable growth
By their very nature, bearings make a positive contribution to the natural environment, enabling machinery to operate more efficiently, consume less power, and require less lubrication. By raising the performance bar for our own products, SKF is enabling a new generation of high-efficiency products and equipment. With an eye to the future and the world we will leave to our children, the SKF Group policy on environment, health and safety, as well as the manufacturing techniques, are planned and implemented to help protect and preserve the earth's limited natural resources. We remain committed to sustainable, environmentally responsible growth.

Principles of actuator and pillar selection and application

Linear actuator definition and type 10

Performance considerations 11

Selection criteria 12

Calculations 13

Application checklist 14

Typical applications 15

Selection guide 16

Linear actuator definition and type

Definition: Electro-mechanical linear actuators enable precise, controlled, and repeatable push/pull movement in linear drive applications (see illustrations below).

Linear actuators serve as efficient, virtually maintenance-free, and environmentally friendly alternatives to hydraulic or pneumatic types.

Standard versions can handle loads as great as 12 kN, deliver speeds up to 150 mm/s, and travel as far as 1 500 mm. They can be self-contained in aluminum, zinc, or polymer housings and ready-to-mount for easy plug-in operation.

Actuators with modular design and open architecture offer opportunities to choose and integrate components to achieve customized solutions within existing envelopes. Application potential expands with the introduction of technologies for specific purposes, such as hall sensors, limit switches, potentiometers, friction clutches, or back-up nuts.

Screw-type linear actuators powered by an electric AC or DC motor basically consist of a lead screw (threaded shaft/spindle) with drive nut and push tube. In 90 % of the cases, a gearbox between the motor and the screw is also present.

When power is supplied, the motor rotates the lead screw, which causes the drive nut to travel and extend the push tube. Reversing the motor rotation retracts the push tube.

Pushing/pulling

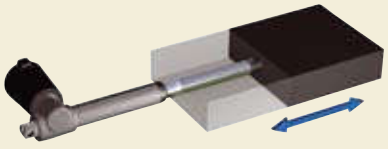

Opening/closing

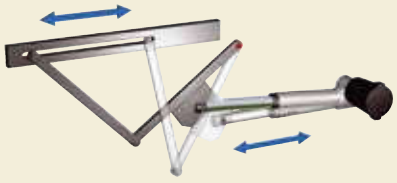

Clamping/gripping

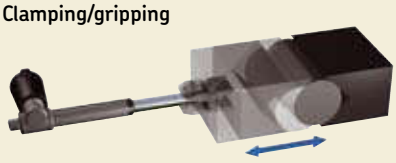

Tilting

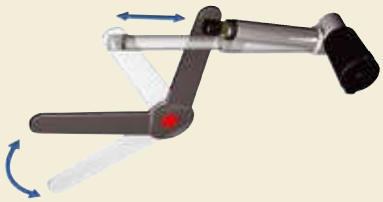

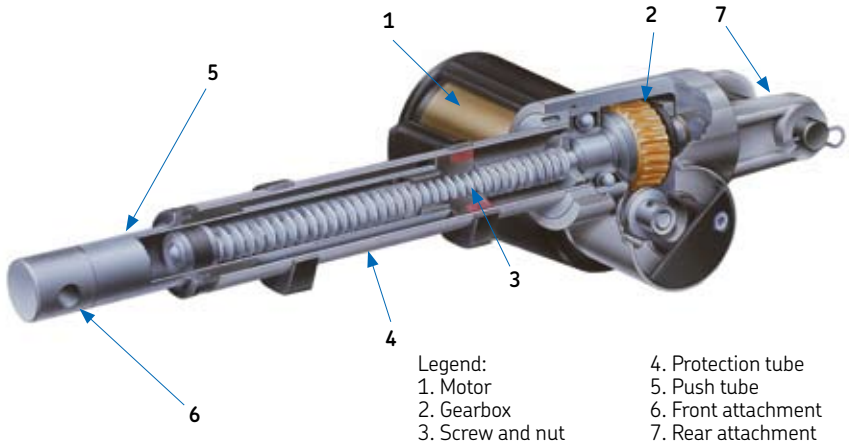

Legend:
1. Motor
2. Gearbox
3. Screw and nut
4. Protection tube
5. Push tube
6. Front attachment
7. Rear attachment

Raising/lowering

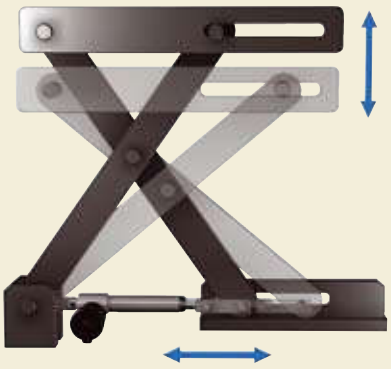

Ball screw

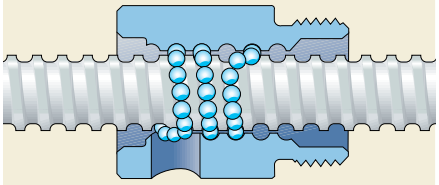

Acme screw

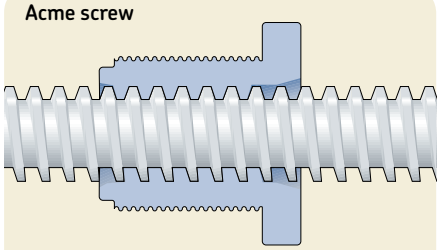

Friction clutch

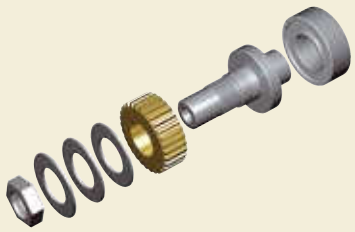

Ball screw vs. acme screw: Traditional types of lead screws include ball screws and acme screws, whose specification will be influenced by an actuator's configuration and load requirements.

Ball screws: All-steel ball screws consist of a screw shaft, ball nut with a ball recirculation system to convert rotary motion into smooth, accurate, and reversible linear motion (or torque to thrust). The row of circular rolling elements is self-contained in a closed system between the nut and screw for a design exhibiting extremely low friction coefficients. The low frictional resistance minimizes wear, improves efficiency, and reduces operating temperature for longer service life.

Ball screws can handle extreme loads, achieve high duty cycles, operate over a wide temperature range, and deliver the precision necessary to equip actuators performing over long periods at high speeds and requiring high dynamic capability. Brakes usually will be specified for ball screw actuators to prevent back-drive.

Acme screws: These screws transmit torque into linear motion through direct sliding friction. A typical assembly consists of a steel screw and plastic nut.

Some of the products are equipped with acme screws with a relatively high friction coefficient that makes them well suited for self-locking application. Acme screw actuators accommodate high static load, withstand excessive vibration, operate quietly, and represent cost-effective solutions.

Performance considerations

Beyond the basic fundamentals of actuator operation, applications may require feedback on position and/or direction, limits on motion or travel in a particular direction, or protection against dynamic overload. Enabling technologies have been developed for these purposes.

Limit switch: Its purpose is to limit actuator motion or travel in a particular direction. When activated, the switch opens or closes an electrical contact. When the contact is closed, current will flow through the switch; when the contact is open, no current will flow through the switch. These devices prevent actuators from running into the mechanical ends and may allow for the adjustment of stroke length.

Hall sensors: These rotary or linear sensing devices determine the relative position of an actuator. Two sensors detect the changing magnetic field created by a rotating magnet and then relay corresponding output pulses to a control unit to provide the position feedback.

Potentiometer: A potentiometer is an analouge feedback device. The potentiometer is considered as an absolute sensor with unique value in each position. Sometimes it is called a variable resistance that can be read and feed into a controller for positioning control of the application.

Friction clutch: This function will protect the actuator from mechanical damage when it reaches either of its mechanical end positions or when the maximum dynamic load is momentarily exceeded. A friction clutch consists of a series of steel plates engaging a hub and a series of friction rings engaging a housing. Pressure is exerted on the plates and rings by an adjuster acting through a spring and pressure plate. The friction clutch is not intended for use as a load limiter, but only for protection of the actuator and end-use equipment in the event of dynamic overload.

Ball detent clutch: A ball detent type clutch transmits force through hardened balls which rest in detents on the shaft and are held in place with springs. An overtorque/load condition pushes the balls out of their detents, thereby decoupling the lead-screw from the motor.

Back-up nut: This prevents an actuator from collapsing if a drive nut fails. The back-up nut is usually in metal, exhibits greater anti-shear strength than the drive nut, and only makes contact with the threads of the spindle when the threads of the drive nut fail. The back-up nut carries the load and may be able to lower the load (signaling need for repair).

Slip stick effect: The cycle of alternating slipping and sticking as two surfaces rub against each other. The effect is vibration and noise. Resonances within other materials can occur. This effect can sometimes be heard, felt or seen. With linear actuators, Slip stick has been witnessed between the Delrin and aluminum or steel, such as between drive nut and spindle, and glide pad and extrusion.

Selection criteria

An actuator's performance will be influenced by a variety of factors intrinsic to an application. An understanding of these factors can help you select the most suitable actuator design and solution. Relevant factors to evaluate include push/pull force, static and dynamic load capacity, speed, stroke and retracted length, duty cycle, and life calculation.

Force: Push force is the maximum extending force that an electric linear actuator can produce in Newtons (N). Pull force is the maximum retracting force. Some actuators do not produce equal push and pull forces, while others do not permit pull force.

Load capacity: Maximum static load refers to the weight or mass that an actuator can handle when standing still without causing permanent damage or causing the actuator to start "going backwards." (Subjecting an actuator to loads in excess of stated values can increase the risk of permanent deformation to some parts.) Maximum dynamic load represents the maximum total weight or mass that the actuator can move. The decisive factor for this value is the size of the motor and the type of gearing. Some versions feature an integral mechanical safety device similar to a clutch to protect the motor and gears from damage.

Speed: This represents the rate of travel (when extending or retracting) and is usually measured in mm/s or in./s. Speed can vary under different loads, often depending on the motor. Actuators with DC motors exhibit a speed variation inversely proportional to the load. Actuators with AC motors move at more consistent speed, which is only slightly affected by the load. Other factors impacting the speed will include the magnitude and/or frequency of the applied voltage, the ambient temperature, and how well an actuator is integrated into the end-use application.

Stroke and retracted length: The stroke describes the length (in millimeters or inches) that an electro-mechanical linear actuator or telescopic pillar will extend or retract. The retracted length is the shortest distance between the two fixed points on an actuator when the actuator is in its innermost position. The dimensions reflect a measurement from the center of the rear and front mounting holes.

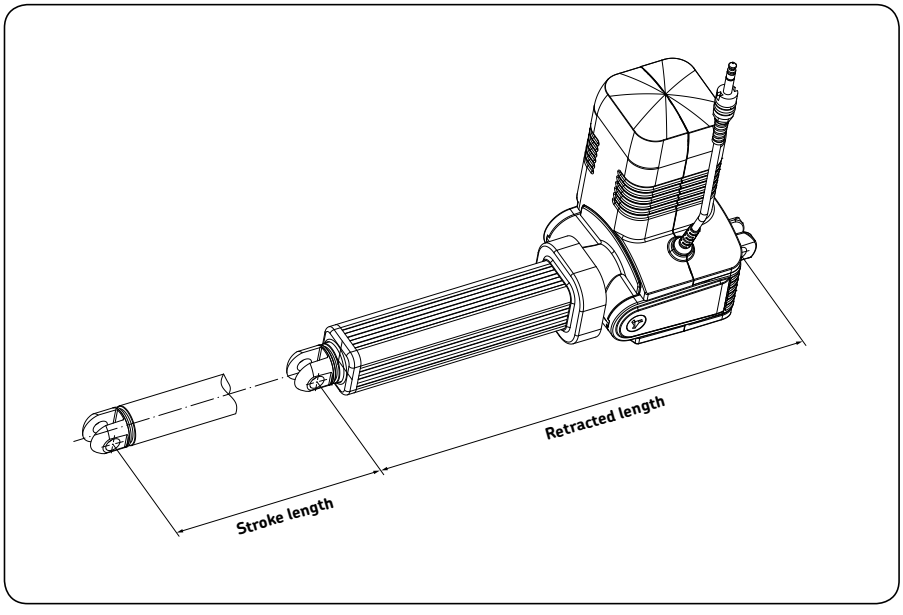

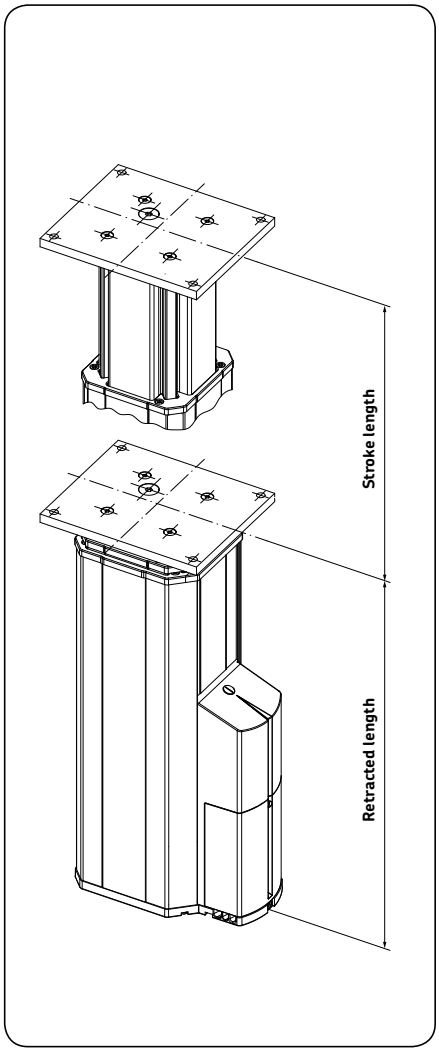

Calculations

Duty cycle and duty factor: This defines the maximum period during actuator operation without interruption. The corollary duty factor expresses how long an actuator can handle non-stop operation before it overheats or is otherwise damaged. Many variables will affect the duty cycle, including running time, application, design, installation, and components. It is necessary for you to assess the type of task, its duration, frequency, and repetitiveness when evaluating expected duty cycle.

SKF linear actuators are designed for intermittent operation. Permitted load is related to the duty factor i.e. load must be reduced, when the duty factor is increased. Duty cycle is defined as the relation between operational time, load and rest time. In the diagrams, maximum load is shown as a function of duty cycle. If the recommended duty factor is exceeded, the actuator may overheat and be damaged.

Permitted load for DC-actuators at a specific duty factor is expressed in percentage of maximum dynamic load capacity (→ **fig. 1**).

$$\text{Duty factor \%} = \frac{N}{N+R}\ 100$$

where
N = running period under load
R = rest period
N+R = total cycle time

Example:
An actuator is running with the following cycle, 5 seconds running, 5 seconds rest, 5 seconds running, 15 seconds rest, and so on.

Calculate duty factor and maximum load for this working cycle.

$$\text{Duty factor} = \frac{5+5}{(5+5)+(5+15)}\ 100 = 33\%$$

Max. dynamic load = 5 000 N
Permitted load = 0,73 × 5 000 = 3 650 N

Life calculation: An actuator's life expectancy is divided into two types: its life and its service (or operational) life. The actuator's life is defined as the time the actuator can live without being derated due to age. The actuator's service life is defined as the time (or how many cycles) the actuator can operate. For example, an actuator is installed to operate once a day for 10 years. Its expected life is 10 years and its required service life is 10 × 365 cycles.

The service life of a ball screw actuator normally will be determined by the L_{10} life of the ball screw. In most cases, there is less wear on the worm gear and bearings than on the ball screw.

Under certain circumstances, the life of the motor is shorter than that of the ball screw. Generally, the life of DC-motors is reduced when load and number of starts/stops are increased.

To calculate the basic rating life L_{10} of a ball screw, all you need to know is the dynamic load and actual stroke. L_{10} is defined as the life that 90% of a sufficiently large group of apparently identical ball screws can be expected to attain or exceed.

$$L_{10ds} = \frac{500\,000\ p}{S}\left(\frac{C}{F_M}\right)^3$$

where
L_{10ds} = basic rating life in double strokes i.e. a stroke from one end position to the other and back again.
p = lead of the ball screw (mm).
S = actual stroke (mm).
C = ball screw basic dynamic load rating (N).
F_M = cubic mean load (N).

In many cases, the magnitude of the load fluctuates. In order to calculate the equivalent screw load, it is first necessary to determine a constant mean load F_m which would have the same influence on the ball screw as the actually fluctuating load. A constant mean load can be obtained from the formula below.

$$F_M = \sqrt[3]{\frac{F_1^3 S_1 + F_2^3 S_2 + F_3^3 S_3 + \ldots}{S_1 + S_2 + S_3 + \ldots}}$$

Example:
An actuator with a stroke of 500 mm has a load of 2 800 N in one direction of movement and 2 100 N in the other. The entire stroke of the actuator is utilized.

$$F_M = \sqrt[3]{\frac{2\,800^3 \times 500 + 2\,100^3 \times 500}{500+500}} = 2\,500$$

Fig. 1

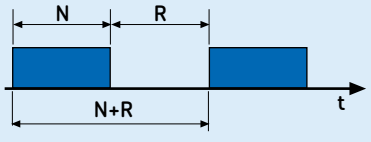

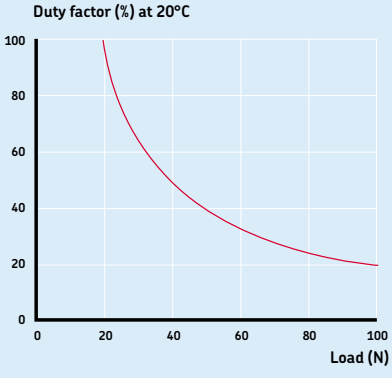

Application checklist

Designing and specifying an electro-mechanical linear actuator begins by assessing as many application factors as possible to make the most appropriate and educated technology choices.

- How much force and in what directions (push, pull, vertical, and/or horizontal) will the actuator need to move?
- How far and how fast will the actuator need to travel?
- How often will the actuator operate and how much time will elapse between operations?
- What is the desired lifetime for the application?
- How will the actuator be mounted and will front and/or back mounts require special configurations?
- Does the application suggest a need for safety mechanisms?
- Will environmental factors (temperature variations, moisture, or vibration) pose a challenge to operation?
- Is space limited?
- What are the power supply options?
- If a motor is used, what type (AC, DC, or special) and what voltage?
- Is feedback required for speed and/or position?
- Are revised specifications likely or anticipated in the future?

Typical applications

Off-highway	 *Hood lifter*	 *Highway mobile sign*
Food and beverage	 *Grill*	 *Tilting pan*
Medical	 *Imaging system*	 *Incubator*
Healthcare	 *Treadmill*	 *Massage table*
Solar tracking	 *Solar tracker*	
Factory automation	 *Adjustable workstation*	 *Frame gripper*

Selection guide

Telescopic pillars AC versions

	Type	Voltage	Max rated load push	Max rated load pull	Max speed full load	Max speed no load	Stroke (S)	Page
	–	V	N	N	mm/s	mm/s	mm	No.
	**TLC**	120 or 230 AC	4 000	4 000	15	22	100 to 700	38
	**TFG 50**	120 AC	2 500	2 500	15	19	200 to 700	42
	**TFG 90**	230 AC	2 500	2 500	15	19	200 to 700	42
	**THC**	120 or 230 AC	1 800	1 800	15	20	200 to 700	46
	**TXG**	120 or 230 AC	1 500	0	17	23	200 to 600	50
	**TGC**	120 or 230 AC	1 000	1 000	11	12	200 to 700	54

Telescopic pillars
DC versions

	Type	Voltage	Max rated load push	Max rated load pull	Max speed full load	Max speed no load	Stroke (S)	Page
	–	V	N	N	mm/s	mm/s	mm	No.
	**CPI**	24 DC	4 000	4 000	31	38	200 to 700	60
	**TLG**	24 DC	4 000	0	25	33	200 to 700	64
	**TLT**	24 DC	4 000	0	25	42	300 to 700	68
	**TFG 10**	24 DC	2 500	2500	15	19	200 to 700	72
	**THG**	24 DC	2 000	0	12	15	200 to 700	76
	**CAWA**	24 DC	1 650	0	14	22	500 to 1 000	80

Selection guide

Telescopic pillars
DC versions

	Type	Voltage	Max rated load		Max speed		Stroke (S)	Page
			push	pull	full load	no load		
	–	V	N	N	mm/s	mm/s	mm	No.
	**TXG**	24 DC	1 500	0	17	23	200 to 600	84
	**TMA**	24 DC	1 000	0	35	55	500	88
	**TMD**	24 DC	800	0	35	60	700	92

Telescopic pillars
No motor

	Type	Voltage	Max load		Max speed		Stroke (S)	Page
			push	pull	full load	no load		
	–	V	N	N	mm/s	mm/s	mm	No.
	**FRE**	No motor	N/A	N/A	N/A	N/A	200 to 700	98
	**TMS**	No motor	4 000	4 000	N/A	N/A	250 to 700	102

Telescopic pillars - retracted length/bending load ratio

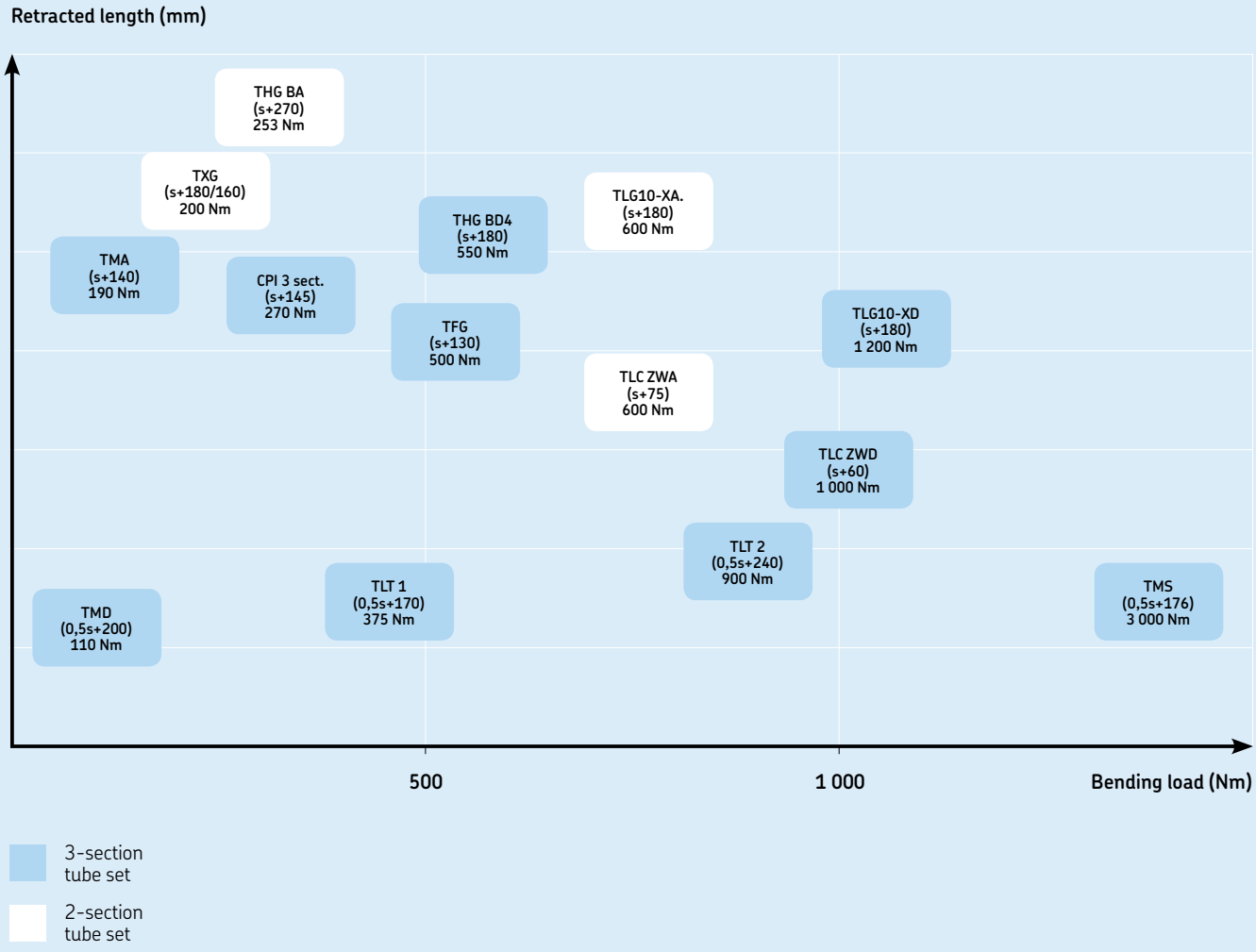

Selection guide

Linear actuators
AC versions

	Type	Voltage	Max rated load		Max speed		Stroke (S)	Page
			push	pull	full load	no load		
	–	V	N	N	mm/s	mm/s	mm	No.
	**SLS**	3×400 AC	50 000	50 000	74	88	100 to 700	110
	**SKS/SKA**	3×400 AC	30 000	30 000	45	54	100 to 700	114
	**SKD**	3×400 AC	15 000	15 000	25	33	100 to 700	118
	**STD**	3×400 AC	15 000	15 000	10	14	100 to 700	122
	**STW**	230 AC	15 000	15 000	12	13	100 to 700	126
	**MAX 6**	120 or 230 AC	8 000	6 000	13	18	50 to 700	130

Linear actuators
AC versions

	Type	Voltage	Max rated load push	Max rated load pull	Max speed full load	Max speed no load	Stroke (S)	Page
	–	V	N	N	mm/s	mm/s	mm	No.
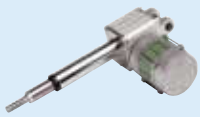	**CAR 40**	120 or 230 AC	6 000	6 000	40	40	100 to 700	134
	**CAHB–31**	115 or 230 AC	6 000	6 000	48	57	102 to 610	138
	**SJ**	115 or 230 AC	5 000	5 000	6,6	7,2	100 to 600	142
	**DSP**	3×400 AC	4 500	4 500	50	58	100 to 700	146
	**CAP 32**	120 or 230 AC	3 500	3 500	32	32	50 to 700	150
	**CAR 32**	120 or 230 AC	3 500	3 500	32	32	50 to 700	154

Selection guide

Linear actuators
AC versions

	Type	Voltage	Max rated load		Max speed		Stroke (S)	Page
			push	pull	full load	no load		
	–	V	N	N	mm/s	mm/s	mm	No.
	**CAT 32B**	120, 230 or 400 AC	3 500	3 500	32	32	50 to 700	158
	**CAT 33**	120, 230 or 400 AC	3 000	3 000	24	24	100 to 400	162
	**WSP**	230 AC	2 600	2 600	50	50	100 to 700	166
	**CAHB–30**	115 or 230 AC	2 300	2 300	25	26	102 to 610	170
	**CAT 33H**	120, 230 or 400 AC	1 200	1 200	90	90	100 to 400	174

Linear actuators
DC versions

	Type	Voltage	Max rated load push	Max rated load pull	Max speed full load	Max speed no load	Stroke (S)	Page
	–	V	N	N	mm/s	mm/s	mm	No.
	**SKG**	24 DC	15 000	15 000	55	73	100 to 700	180
	**STG**	24 DC	15 000	15 000	14	20	100 to 700	184
	**RU**	24 DC	12 000	8 000	8	15	100 to 700	188
	**MAX 3**	12 or 24 DC	8 000	6 000	12,7	18	50 to 700	192
	**CAR 40**	24 DC	6 000	6 000	40	60	100 to 700	196
	**ECO**	24 DC	6 000	4 000	9	13	50 to 300	200

Selection guide

Linear actuators
DC versions

	Type	Voltage	Max rated load		Max speed		Stroke (S)	Page
			push	pull	full load	no load		
	–	V	N	N	mm/s	mm/s	mm	No.
	**FD**	24 DC	6 000	4 000	6,2	8,2	50 to 300	204
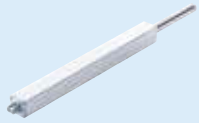	**Magdrive**	24 DC	6 000	6 000	8,5	15	50 to 700	208
	**CAHB–21**	12 or 24 DC	4 500	4 500	45	65	102 to 610	212
	**ASM**	12 or 24 DC	4 000	4 000	50	70	100 to 700	216
	**CAP 43B**	24 DC	4 000	4 000	52	65	50 to 700	220
	**CAT 32B**	12 or 24 DC	4 000	4 000	52	67	50 to 700	224

Linear actuators
DC versions

	Type	Voltage	Max rated load push	Max rated load pull	Max speed full load	Max speed no load	Stroke (S)	Page
	–	V	N	N	mm/s	mm/s	mm	No.
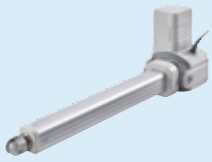	**MAX 1**	24 DC	4 000	4 000	12,7	18	50 to 700	228
	**CAR 32**	12 or 24 DC	3 500	3 500	40	60	50 to 700	232
	**CAP 32**	12 or 24 DC	3 500	3 500	40	60	50 to 700	236
	**CAP 43A**	24 DC	3 000	3 000	40	52	100 to 400	240
	**CAT 33**	12 or 24 DC	3 000	3 000	40	52	100 to 400	244
	**CAHB–20**	12 or 24 DC	2 500	2 500	27	33	102 to 610	248

Selection guide

Linear actuators
DC versions

	Type	Voltage	Max rated load		Max speed		Stroke (S)	Page
			push	pull	full load	no load		
	–	V	N	N	mm/s	mm/s	mm	No.
	**CARE 33**	24 DC	2 000	2 000	32	45	50 to 500	252
	**CAR 22**	12 or 24 DC	1 500	1 500	20	30	50 to 300	256
	**CAT 33H**	12 or 24 DC	1 200	1 200	150	190	100 to 400	260
	**CAHB–10**	12 or 24 DC	1 000	1 000	45	56	50 to 300	264
	**CALA 36A**	12 or 24 DC	600	600	17	31	50 to 200	268
	**CAT 21B**	24 DC	600	600	8,1	9,7	50 to 300	272

Linear actuators
No motor

	Type	Voltage	Max rated load push	Max rated load pull	Max speed full load	Max speed no load	Stroke (S)	Page
	–	V	N	N	mm/s	mm/s	mm	No.
	**CARN 32**	No motor	3 500	3 500	N/A	N/A	50 to 700	280
	**CCBR 32**	No motor	2 500	2 500	N/A	N/A	50 to 700	284

Rotary actuators

	Type	Max torque	Max speed	Size	Page
	–	Nm	rpm	mm	No.
	**CRAB 17** **CRAB 17**	70 105	8 20	125 125	290 290
	**CRAB 05**	100	3	86	296

Selection guide

Control units

	Type	Functionality	Max motor	Input	Output	Page
	–	–	n°	V	V/A	No.
	**SCU**	Encoder processing	6	24 DC 120 or 230 AC	24/30 24/18	302
	**VCU**	Basic functions	5	120 or 230 AC	24/7 or 18	306
	**BCU**	Basic functions	3	120 or 230 AC	24/7	310
	**CB 200S**	Basic functions	3	100 - 240 AC	24/3	314
	**MCU**	Basic functions	2	24 DC	24/7 or 18	316
	**LD–014** **LD–015** **LD–015**	Synchronous Synchronous Synchronous	4 3 2	120 or 230 AC 120 or 230 AC 120 or 230 AC	24/11 24/11 24/9	318 320 320

Control units

	Type	Functionality	Max motor	Input	Output	Page
	–	–	n°	V	V/A	No.
CAED ANR	**5–24R –P0**	Analogical feedback	1	24 DC	24/5	322
	9–24R –P0	Analogical feedback	1	24 DC	24/9	322
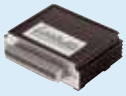						
CAED	**3–24R**	Basic functions	1	24 DC	24/3	324
	5–24R	Basic functions	1	24 DC	24/5	324
	9–24R	Basic functions	1	24 DC	24/9	324
						
CAEV	**110/220**	Basic functions	1	120 or 230 AC	120 or 230 AC	326
						

Selection guide

Hand switches

	Type	Operating power	Max operating channels	Type of protection	Color	Page
	–	V DC/mA	n°	IP	–	No.
EHA 	**EHA 1**	12/50	2	67	Grey	332
	EHA 3	12/50	5	67	Grey	334
	**EHE 1**	38/50	2	×7	Grey	336
HS 	**HS 112**	40/50	1	–	Black	338
	HS 124	40/50	2	–	Black	338
	HS 126	40/50	2	–	Black	338
	HS 138	40/50	3	–	Black	338
	**PHC**	–	4	66	Grey	340
	**CAES 31C**	30/33	1	54	Black	342

Foot switches

	Type	Operating power	Max operating channels	Type of protection	Color	Page
	–	V DC/mA	n°	IP	–	No.
	**ST**	12/50	3	×5	Blue/anthracite	344
	**PFP 1K** **PFP 1**	– –	1 1	21 21	Grey Anthracite	346 346

Desk switches

	Type	Operating power	Max operating channels	Type of protection	Color	Page
	–	V DC/mA	n°	IP	–	No.
	**ST**	12/50	3	×0	Black	348
	**LD**	5/50	2	32	Black	350

Selection guide

Desk switch
(pneumatic)

	Type	Max operating channels	Air tube	Color	Page
	–	n°	–	–	No.
	**PAM**	1	1,5 m straight	Anthracite	352

Project sales

Rotary actuators

	Type	Torque	Max speed	Size	Features	Page
	–	Nm	rpm	mm	–	No.
CRAB	**CRAB 12**	200	20	120	Compact	356
	CRAB 20	400	15	155	Zero backlash	356
	CRAB 30	1 000	10	228	Zero backlash	356
	CRAB 40	1 700	8	286	Zero backlash	356



Compact electro-mechanical cylinder	Type	Screw lead	Nominal force[1)]	Speed	Stroke	Page
	–	mm	kN	mm/s	mm	No.
CEMC	**1804–145–1–42J**	3,75	4,7	350	145	359
	2404–•••–•–62L	4,00	8,7	300	125–135–170	359
	2406–125–•–62L	6,00	5,8	450	125	359
	2404–•••–•–63I	4,00	13,1	300	125–135–170	359
	2406–125–•–63I	6,00	8,7	450	125	359
	2104–170–•–D63L	4	9,0	353	170	360
	2404–•••–2–D82P	4	14,1	320	90–170	360
	2406–•••–2–D82P	6	9,4	480	90–170	360
	3004–•••–2–D82P	4	14,1	266	90–170	360
	3006–•••–2–D82P	6	9,4	400	90–170	360
	3004–•••–2–D84H	4	27,4	266	90–170	360
	3006–•••–2–D84H	6	18,3	400	90–170	360
	3004–•••–2–D86F	4	39,5	266	90–170	360
	3006–•••–2–D86F	6	26,3	400	90–170	360



[1)] Nominal force: can be used 100 % of time at low speed (10 % of maximum speed)

Modular electro-mechanical cylinder	Type	Nominal force	Linear speed	Page
	–	kN	mm/s	No.
SRSA 	**2505**	40,7	333	362
	2510	37,5	450	362
	3005	52,9	325	362
	3010	49,9	650	362
	3905	63,3	279,2[1)]	362
	3910	61,0	350	362
	3915	61,5	650	362
	4805	106,5	220,8[1)]	362
	4810	95,3	350	362
	4815	130,4	412,5	362
	4820	86,3	550	362
	6010	161,9	275	362
	6015	162,3	462,5	362
	6020	142,7	666,7	362
	7510	255,5	250[1)]	362
	7515	240,2	357[1)]	362
	7520	199,4	466,7[1)]	362
SVSA	**3201**	40,6	10,4[1)]	362
	4001	62,3	8,3[1)]	362
	5001	110,2	6,7[1)]	362
SLSA	**2525**	8,2	1 500[1)]	362
	4040	12,4	1 500[1)]	362

[1)] Peak force to be used only in static phases. For dynamic ones, this value must be limited inside the motion controller at 80 % of the dynamic load by the user. Please contact SKF.

Drive by wire

	Type	Force	Stroke	Max. speed	Page
	–	N	mm	mm/s	No.
	**EPB**	4 000	65	18	366



Telescopic pillars

AC versions

TLC 38
TFG 42
THC 46
TXG 50
TGC 54

DC versions

CPI 60
TLG 64
TLT 68
TFG 72
THG 76
CAWA 80
TXG 84
TMA 88
TMD 92

No motor

FRE 98
TMS 102



Telescopic pillars – AC versions

TLC 38

TFG 42

THC 46

TXG 50

TGC 54

Telescopic pillar Telemag TLC

Benefits

- Push or pull load
- High bending load
- Quiet
- Powerful
- Plug and play

Standards

- EN/IEC 60601–1
- UL 60601–1



Suitable control units and accessories

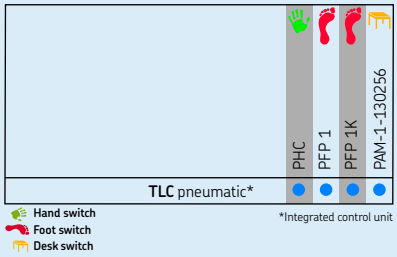

Connecting diagrams

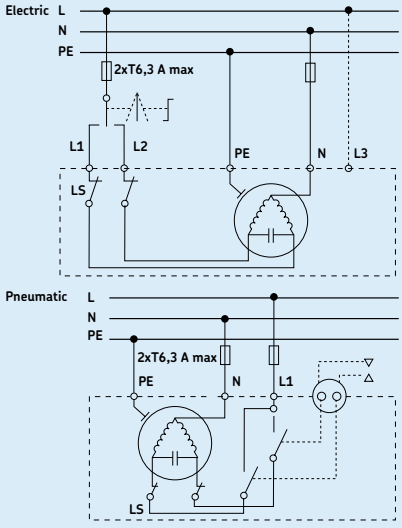

Dimensional drawing

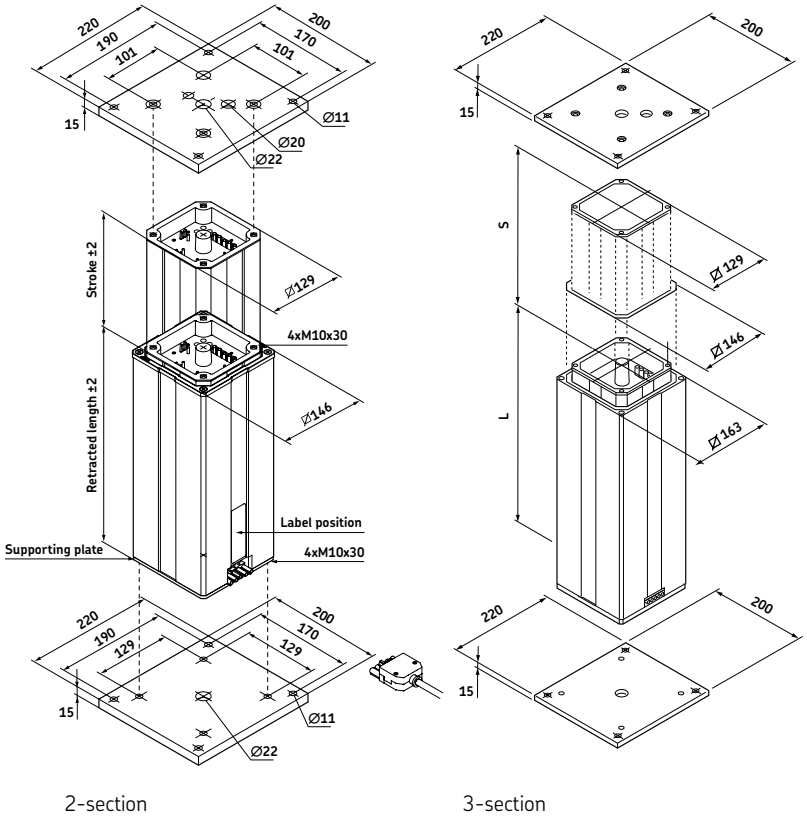

2-section

3-section

Legend:
S = stroke
L = retracted length

Note: mounting plates are not included.
To be ordered separately.

Technical data

		Unit	TLC 12ZWAS	TLC 12ZWAK	TLC 12ZWDS	TLC 12ZWDK
Rated push load		N	4 000	4 000	4 000	4 000
Rated pull load		N	4 000	4 000	4 000	4 000
Bending load		Nm	up to 630*	up to 630*	up to 2 100*	up to 2 100*
Speed (full load to no load)	120 V AC	mm/s	15 to 22	15 to 22	15 to 22	15 to 22
	230 V AC	mm/s	11 to 17	11 to 17	11 to 17	11 to 17
Telescopic pillar version		# of section	2-section	2-section	3-section	3-section
Stroke		mm	100 to 700	100 to 700	255 to 700	255 to 700
Retracted length (push version)		mm	S+175	S+175	S+60	S+60
Retracted length (pull version)		mm	S+185	S+185	S+70	S+70
Voltage		V AC	120 or 230	120 or 230	120 or 230	120 or 230
Power	120 V AC	W	1 200	1 200	1 200	1 200
	230 V AC	W	890	890	890	890
Current	120 V AC	A	10	10	10	10
	230 V AC	A	4,1	4,1	4,1	4,1
Duty cycle: intermittent operation	120 V AC	min.	0,8 min./37 min.	0,8 min./37 min.	0,8 min./37 min.	0,8 min./37 min.
	230 V AC	min.	1 min./37 min.	1 min./37 min.	1 min./37 min.	1 min./37 min.
Duty cycle: short-time operation	120 V AC	min.	1,2	1,2	1,2	1,2
	230 V AC	min.	2	2	2	2
Ambient temperature		°C	+10 to +40	+10 to +40	+10 to +40	+10 to +40
Type of protection		IP	20/30	20/30	20/30	20/30
Protection class		–	I	I	I	I
Type of control		–	electrical	pneumatic	electrical	pneumatic
Weight		kg	15,2-24,5	15,2-24,5	18,3-30,5	18,3-30,5

* For details, please see bending load diagrams

Performance diagram

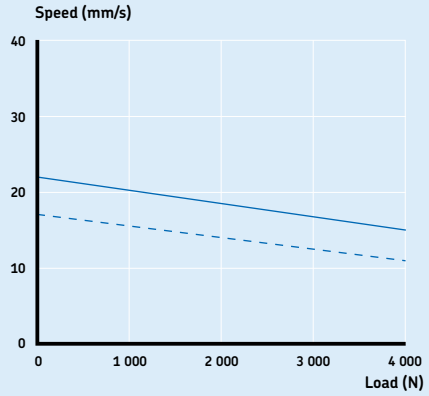

Speed-load diagram

120 V AC version
230 V AC version

Bending load diagrams

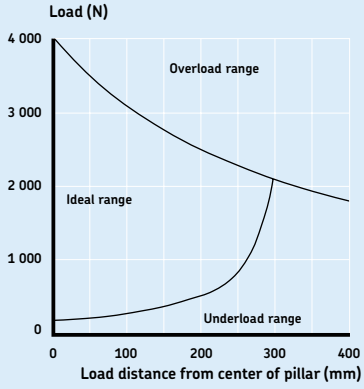

Bending load diagram 2-section

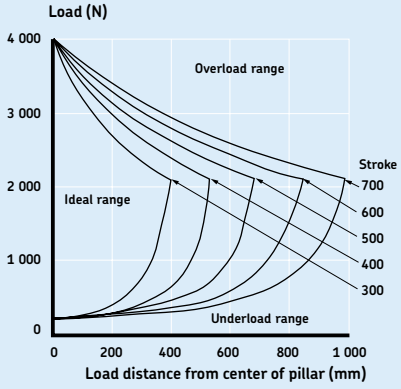

Bending load diagram 3-section

Safety factor load conditions

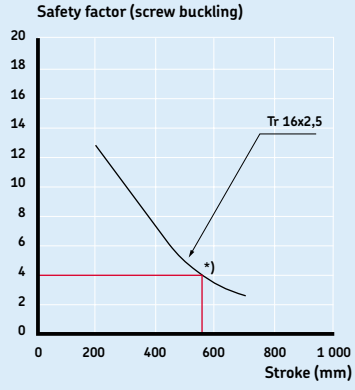

* Safety factor = 4

Ordering key

TLC12 ☐ W ☐ ☐ ☐ ☐ – ☐ 0 ☐

Type

Load:
4 000 N — Z
3 000 N — *X*
2 000 N — *S*

Tube set:
Tube set 2× — A
Tube set 3× — D

Control:
Electrical control — S
Pneumatic control — K
Low-voltage control — *N*

Voltage:
230 V AC/50 Hz (no code)
120 V AC/60 Hz — 2
Special voltage — 9

Type of protection/test:
Standard IP30 (no code)
UL approved — *U*

Construction:
Push load — 0
Customer-specific — *1*
Pull load — 3

Stroke (S):

100 mm, only for tube set 2×, push	1
255 mm, only for tube set 3×, push	1
200 mm, only for tube set 2×	2
300 mm	3
400 mm	4
500 mm	5
600 mm	6
700 mm	7

Options shown in italics are only available on demand. Contact SKF for more information on minimum quantities and additional costs.

Accessories

	Designation	Order N°
Top mounting plate for 2 × tube set	SPL–290268	M/0125624
Bottom mounting plate for 2 × tube set	SPL–290351	M/0125625
Top mounting plate for 3 × tube set	SPL–290268	M/0125624
Bottom mounting plate for 3 × tube set	SPL–290265	M/0125623
Screw (4/plate) for mounting plate	ZBE–510707	M/0125360
Plug AC Telemag 3 pin	SEL–265518	M/0124866
Plug AC Telemag 5 pin	SEL–265519	M/0124864

Telescopic pillar Telemag TFG

Benefits

- Push or pull load
- Compact design
- Fast movement
- Powerful
- Plug and play

Standards

- EN/IEC 60601–1
- UL 60601–1



Suitable control units and accessories

		EHA 3	STJ	STE
TFG 50	Integrated control unit	●	●	●
TFG 90	Integrated control unit	●	●	●

Hand switch
Foot switch
Desk switch

Connecting diagram

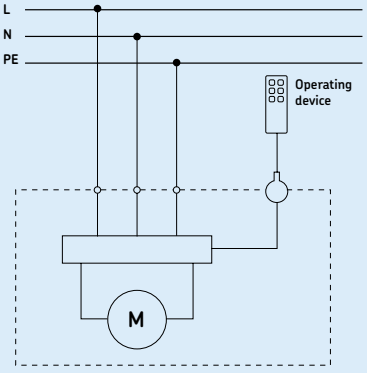

Dimensional drawing

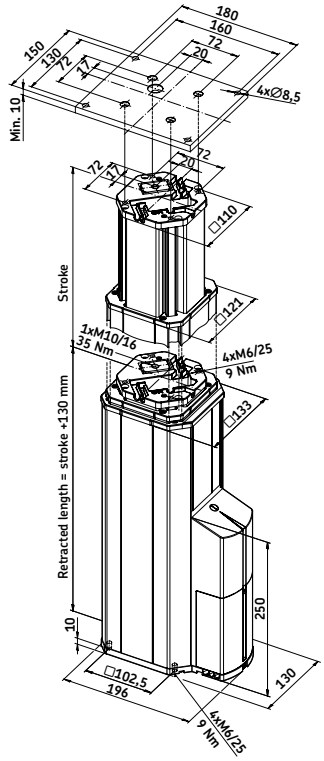

Legend:
S = stroke
L = retracted length

Note: mounting plates are not included.
To be ordered separately.

Technical data

	Unit	TFG 50	TFG 90
Rated push load	N	2 500	2 500
Rated pull load	N	2 500	2 500
Bending load	Nm	up to 500*	up to 500*
Speed (full load to no load)	mm/s	15 to 19	15 to 19
Telescopic pillar version	# of section	3-section	3-section
Stroke	mm	200 to 700	200 to 700
Retracted length	mm	S+130	S+130
Voltage	V AC	120	230
Power	W	160	160
Current	A	1,8	1
Duty cycle: intermittent operation	min.	1 min./9 min.	1 min./9 min.
Duty cycle: short-time operation	min.	3	3
Ambient temperature	°C	+10 to +40	+10 to +40
Type of protection	IP	30	30
Protection class	–	1	1
Type of control	–	electrical	electrical
Weight	kg	8 to 19	8 to 19

* For details, please see bending load diagrams

Performance diagrams

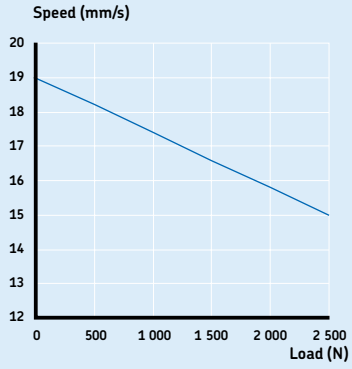

Speed-load diagram

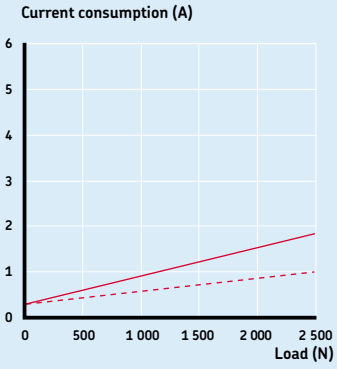

Current-load diagram

TFG 50
TFG 90

Bending load diagrams

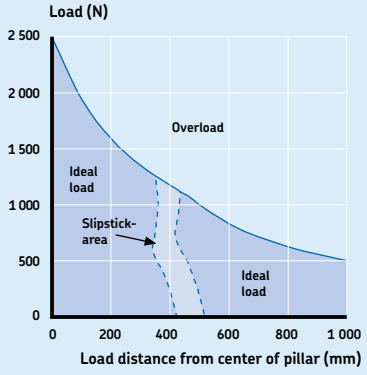

200 mm stroke

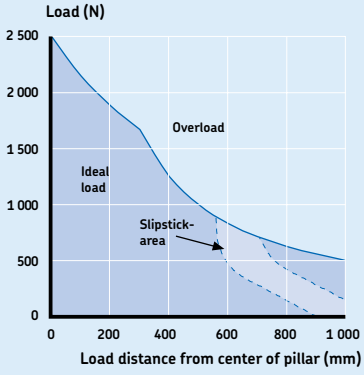

300 mm stroke

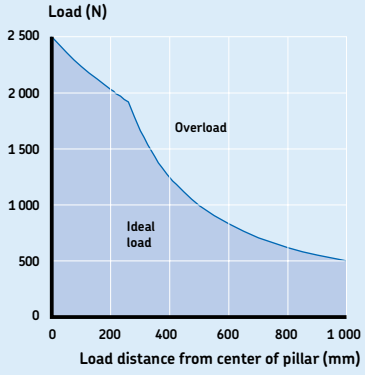

400 mm stroke

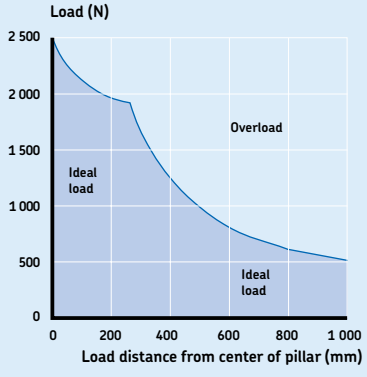

500 mm stroke

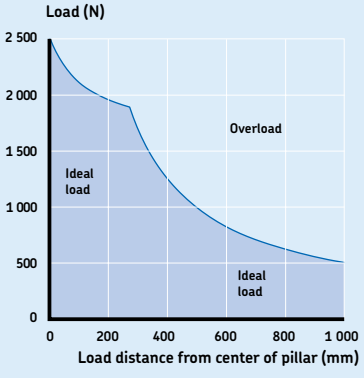

600 mm stroke

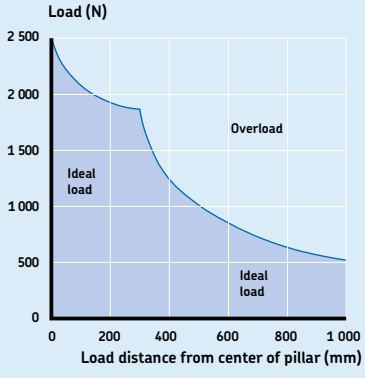

700 mm stroke

Ordering key

TFG □ 0–23 □□□ □□□–000

Type

Voltage:

120 V AC (50/60 Hz)	5
230 V AC (50 Hz)	9

Stroke (S):

200 mm	200
250 mm	250
300 mm	300
350 mm	350
400 mm	400
500 mm	500
700 mm	700

Option:

No option	000
With 2-Hall encoder, 14 pulses per 9 mm travel	E
With mains cable feedthrough (3xAWG16)	C
With control cable feedthrough (10xAWG28)	H

Accessories

	Designation	Order N°
Top mounting plate Bore 72 × 72 mm	SMT–333360	M/0124808
Bottom mounting plate Bore 102,5 × 102,5 mm	SMT–264363	M/0124814
Screw for top mounting plate M10 × 25 (1 screw required)	ZBE–510978	M/0125359
Screw for top mounting plate M6 × 30 (4 screws required)	ZBE–510709	M/0125560
Screw for bottom mounting plate M6 × 30 (4 screws required)	ZBE–510709	M/0125560
Mains cable SEV plug 3 000 mm, black, 3 × 0.75 mm^2	ZKA–304345	M/0125331
Mains cable Schuko plug 3 000 mm, black, 3 × 0.75 mm^2	ZKA–304346–3000	M/0121729
Mains cable US plug 3 000 mm, black, 3 × 0.75 mm^2	ZKA–304347–3000	M/0121762
Mains cable British Standard plug 3 000 mm, black, 3 × 0.75 mm^2	ZKA–304355–3000	M/0121755

Telescopic pillar Telemag THC

Benefits

- Push or pull load
- Quiet
- Powerful
- Robust
- Plug and play

Standards

- EN/IEC 60601–1
- UL 60601–1



Suitable control units and accessories

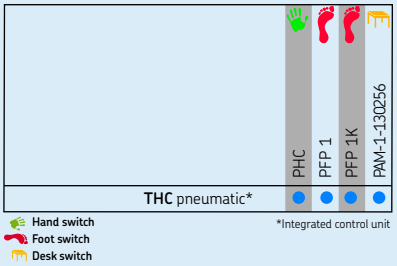

Connecting diagrams

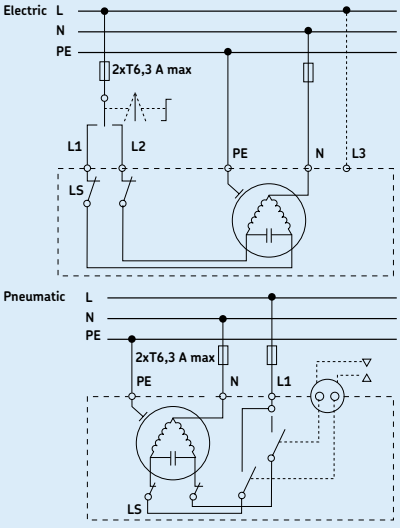

Dimensional drawing

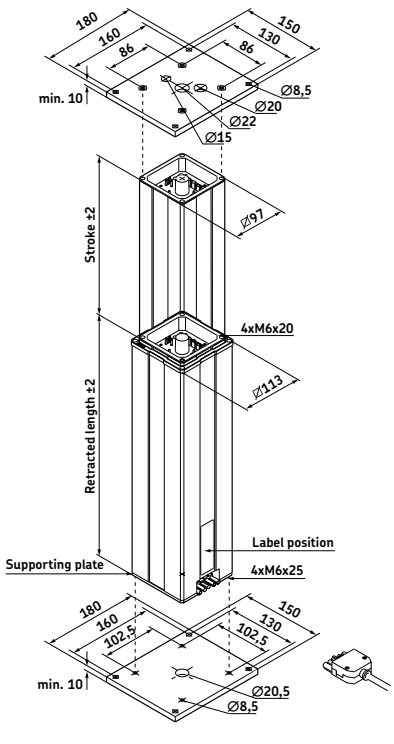

2-section

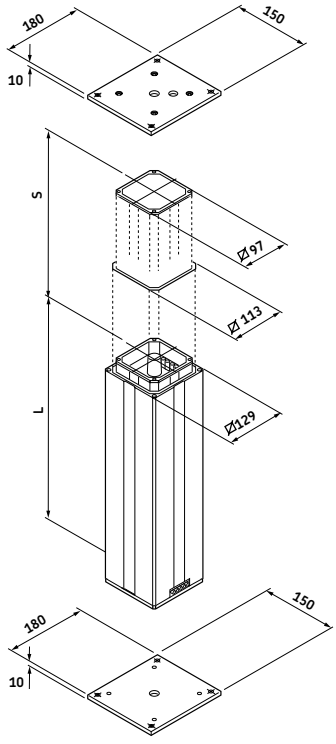

3-section

Legend:
S = stroke
L = retracted length

Note: mounting plates are not included.
To be ordered separately.

Technical data

		Unit	THC 8AWAS	THC 8AWAK	THC 8AWDS	THC 8AWDK
Rated push load		N	1 800	1 800	1 800	1 800
Rated pull load		N	1 800	1 800	1 800	1 800
Bending load		Nm	up to 250*	up to 250*	up to 900*	up to 900*
Speed (full load to no load)	120 V AC	mm/s	15 to 20	15 to 20	15 to 20	15 to 20
	230 V AC	mm/s	12 to 17	12 to 17	12 to 17	12 to 17
Telescopic pillar version		# of section	2-section	2-section	3-section	3-section
Stroke		mm	200 to 700	200 to 700	230 to 700	230 to 700
Retracted length (push version)		mm	S+155	S+155	S+60	S+60
Retracted length (pull version)		mm	S+160	S+160	S+65	S+65
Voltage		V AC	120 or 230	120 or 230	120 or 230	120 or 230
Power	120 V AC	W	720	720	720	720
	230 V AC	W	500	500	500	500
Current	120 V AC	A	6	6	6	6
	230 V AC	A	2,2	2,2	2,2	2,2
Duty cycle: intermittent operation	120 V AC	min.	0,7 min./30 min.	0,7 min./30 min.	0,7 min./30 min.	0,7 min./30 min.
	230 V AC	min.	1 min./27 min.	1 min./27 min.	1 min./27 min.	1 min./27 min.
Duty cycle: short-time operation	120 V AC	min.	1	1	1	1
	230 V AC	min.	2	2	2	2
Ambient temperature		°C	+10 to +40	+10 to +40	+10 to +40	+10 to +40
Type of protection		IP	20/30	20/30	20/30	20/30
Protection class		–	I	I	I	I
Type of control		–	electrical	pneumatic	electrical	pneumatic
Weight		kg	7,9 to 13,5	7,9 to 13,5	8,6 to 17,5	8,6 to 17,5

* For details, please see bending load diagrams

Performance diagram

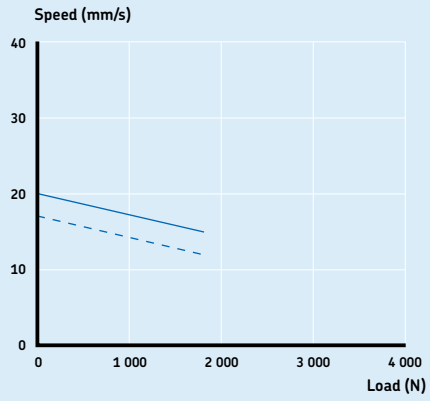

Speed-load diagram

120 V AC version
230 V AC version

Bending load diagrams

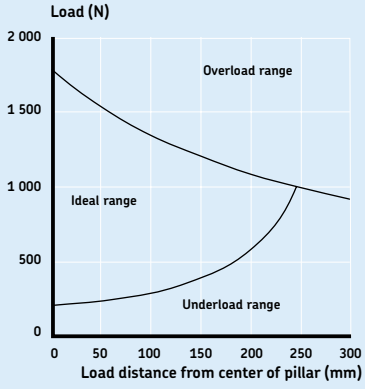

Bending load diagram 2-section

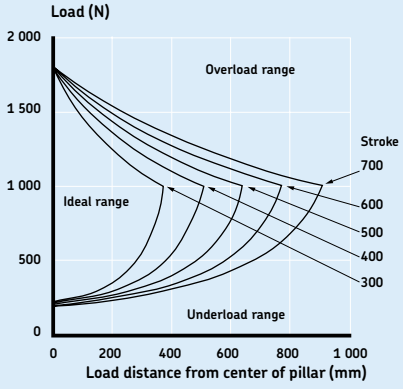

Bending load diagram 3-section

Safety factor load conditions

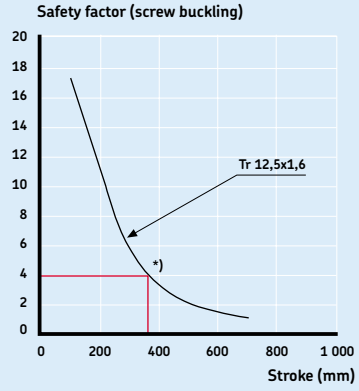

* Safety factor = 4

Ordering key

THC8 ☐ W ☐ ☐ ☐ ☐ – ☐ 0 ☐

Type

Load:
1 800 N — A
1 500 N — B
1 300 N — *C*

Tube set:
Tube set 2× — A
Tube set 3× — D

Control:
Electrical control — S
Pneumatic control — K
Low-voltage control — *N*

Voltage:
230 V AC/50 Hz, IP 30 (no code)
120 V AC/60 Hz, IP 20 — 2
Special voltage — 9

Type of protection /test:
Standard IP30 (no code)
UL test — *U*

Construction:
Push load — 0
Customer-specific — *1*
Pull load — 3

Stroke (S):
200 mm (only for tube set 2×) — 2
300 mm — 3
400 mm — 4
500 mm — 5
600 mm — 6
700 mm — 7

Options shown in italics are only available on demand. Contact SKF for more information on minimum quantities and additional costs.

Accessories

	Designation	Order N°
Top mounting plate for 2 × tube set	SPL–264265	M/0125688
Bottom mounting plate for 2 × tube set	SMT–264363	M/0124814
Top mounting plate for 3 × tube set	SPL–264265	M/0125688
Bottom mounting plate for 3 × tube set	SPL–264237	M/0125622
Screw (4/plate) for top mounting plate	ZBE–510671	M/0125628
Screw (4/plate) for bottom mounting plate	ZBE–510709	M/0125560
Plug AC Telemag 3 pin	SEL–265518	M/0124866
Plug AC Telemag 5 pin	SEL–265519	M/0124864

Telescopic pillar Telesmart TXG

Benefits

- Plug and play
- Powerful and fast lifting
- Aesthetic design

Standards

- EN/IEC 60601–1
- UL 60601–1



Suitable control units and accessories

		EHE1	STF*	STA*
TXG 4	Integrated control unit	●	●	●
TXG 5	Integrated control unit	●	●	●
TXG 8	Integrated control unit	●	●	●
TXG 9	Integrated control unit	●	●	●

Hand switch
Foot switch
Desk switch

* only with FCC plug

Connecting diagram

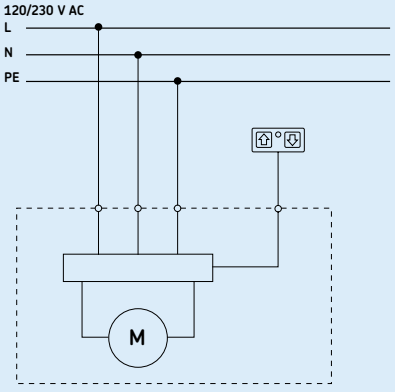

Dimensional drawing

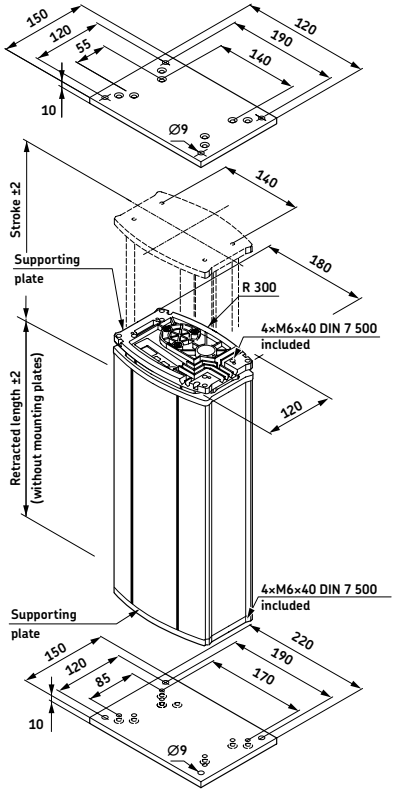

Legend:
S = stroke
L = retracted length

Note: mounting plates are not included. To be ordered separately.

Technical data

	Unit	TXG4/5	TXG8/9
Rated push load	N	1 500	1 500
Rated pull load	N	0	0
Bending load	Nm	up to 210[1)]	up to 210[1)]
Speed (full load to no load)	mm/s	17 to 23	17 to 23
Telescopic pillar version	# of section	2-section	2-section
Stroke	mm	200 to 600	200 to 600
Retracted length	mm	S+180	S+180
Voltage	V AC	120	230
Power	W	N/A	N/A
Current	A	1,8	0,9
Duty cycle: intermittent operation	min.	1 min./9 min.	1 min./9 min.
Duty cycle: short-time operation	min.	N/A	N/A
Ambient temperature	°C	+10 to +40	+10 to +40
Type of protection	IP	30	30
Protection class	–	II/(I)[2)]	II/(I)[2)]
Type of control	–	electrical	electrical
Weight	kg	9 to 14	9 to 14

[1)] For details, see bending load diagrams
[2)] Mandatory for cable feedthrough option

Performance diagram

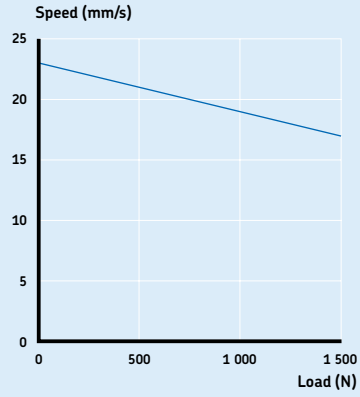

Speed-load diagram

Bending load diagram

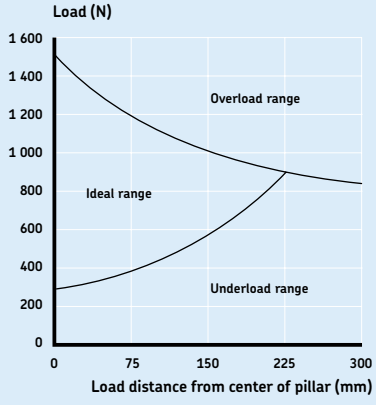

Safety factor load conditions

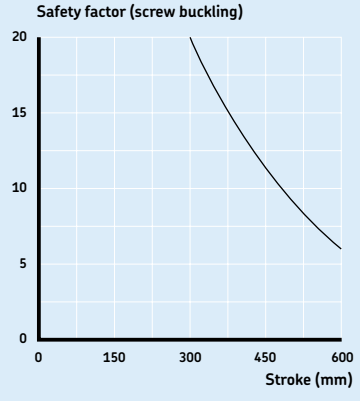

Ordering key

TXG □ 0-00 □ □□□ - □□□ 00

Type

Voltage:

120 V AC, 50/60 Hz, class II	4
120 V AC, 50/60 Hz, class I (mandatory for cable feedthrough option)	5
230 V AC, 50 Hz, class II	8
230 V AC, 50 Hz, class I (mandatory for cable feedthrough option)	9

Color:

Natural anodized coating	5
Customer-specific	*K*
Powder-coated white	*2*
Powder-coated grey	*3*

Option:

None	000
Control connection feedthrough	EYX
Mains cable feedthrough	EYF
Control connection feedthrough, mains cable feedthrough	2AA
Customer-specific	*KKK*

Stroke (S) / Retr. length (L=S+180 or L= S+160 mm)	**L=S+180**	**L=S+160**
200 mm	200	*4CY*
300 mm	300	*4DY*
400 mm	400	*4EY*
500 mm	500	*4FY*
600 mm	600	*4GY*

Options shown in italics are only available on demand. Contact SKF for more information on minimum quantities and additional costs.

Accessories

Mains cable	**Plug**	**Country**	**Order number**	**Comment**
Straight cable 3,5	Euro	General	M/0121730	2-pole
Straight cable 3,5	Schuko	General	M/0121760	3-pole
Straight cable 3,5	UL	USA	M/0121757	2-pole/3-pole
Straight cable 3,5	British standard	UK	M/0121761	2-pole/3-pole
Top or bottom mounting plate			M/0124874	

Note: mounting screws are included in the TXG.

Telescopic pillar Telemag TGC

Benefits

- Push or pull load
- Compact design
- Quiet
- Robust
- Plug and play

Standards

- EN/IEC 60601–1
- UL 60601–1



Suitable control units and accessories

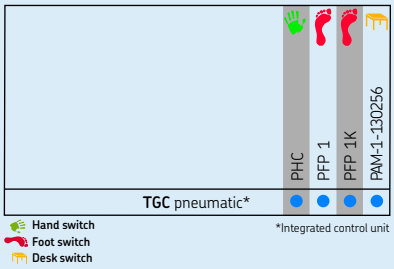

Connecting diagrams

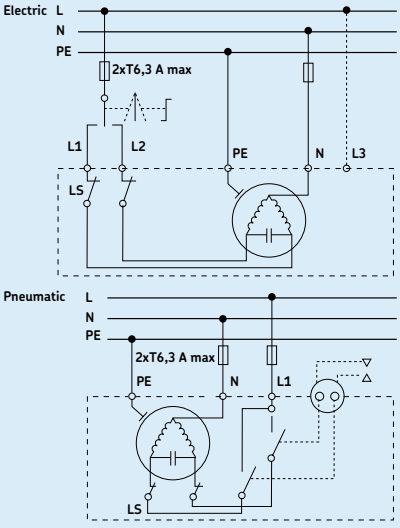

Dimensional drawing

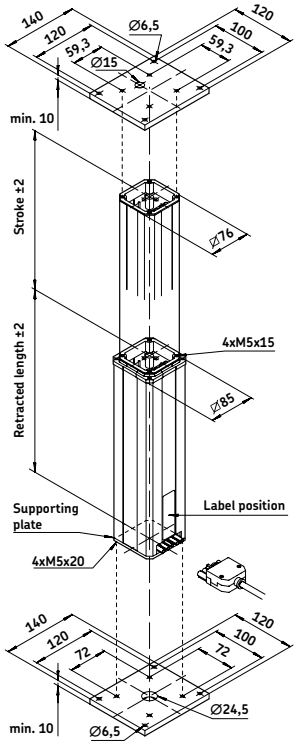

2-section

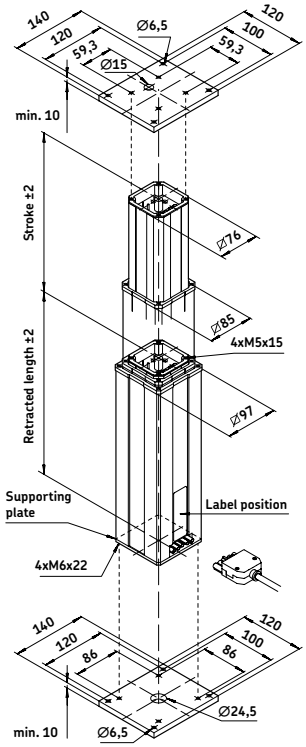

3-section

Legend:
S = stroke
L = retracted length

Note: mounting plates are not included.
To be ordered separately.

Technical data

		Unit	TGC 8AWAS	TGC 8AWAK	TGC 8AWDS	TGC 8AWDK
Rated push load		N	1 000	1 000	1 000	1 000
Rated pull load		N	1 000	1 000	1 000	1 000
Bending load		Nm	up to 130*	up to 130*	up to 450*	up to 450*
Speed (full load to no load)	120 V AC	mm/s	11 to 12	11 to 12	11 to 12	11 to 12
	230 V AC	mm/s	9 to 10	9 to 10	9 to 10	9 to 10
Telescopic pillar version		# of section	2-section	2-section	3-section	3-section
Stroke		mm	200 to 700	200 to 700	300 to 700	300 to 700
Retracted length (push version)		mm	S + 145	S + 145	S + 45	S + 45
Retracted length (pull version)		mm	S + 150	S + 150	S + 50	S + 50
Voltage		V AC	120 or 230	120 or 230	120 or 230	120 or 230
Power	120 V AC	W	300	300	300	300
	230 V AC	W	210	210	210	210
Current	120 V AC	A	2,5	2,5	2,5	2,5
	230 V AC	A	0,95	0,95	0,95	0,95
Duty cycle: intermittent operation	120 V AC	min.	0,8 min./21 min.	0,8 min./21 min.	0,8 min./21 min.	0,8 min./21 min.
	230 V AC	min.	1 min./19 min.	1 min./19 min.	1 min./19 min.	1 min./19 min.
Duty cycle: short-time operation	120 V AC	min.	1,5	1,5	1,5	1,5
	230 V AC	min.	2	2	2	2
Ambient temperature		°C	+10 to +40	+10 to +40	+10 to +40	+10 to +40
Type of protection		IP	20/30	20/30	20/30	20/30
Protection class		–	I	I	I	I
Type of control		–	electrical	pneumatic	electrical	pneumatic
Weight		kg	4,5 to 7,5	4,5 to 7,5	5,9 to 9,5	5,9 to 9,5

* For details, please see bending load diagrams

Performance diagram

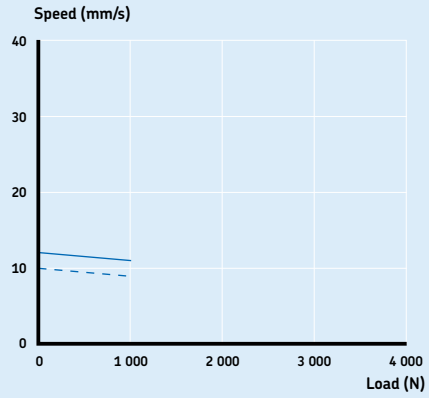

Speed-load diagram

120 V AC version
230 V AC version

Bending load diagrams

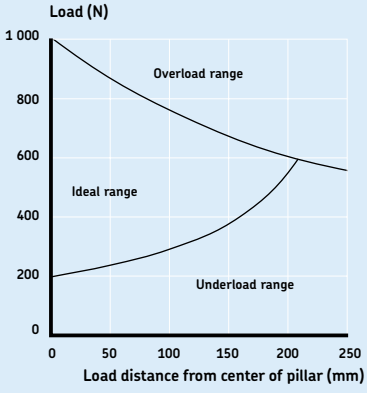

Bending load diagram 2-section

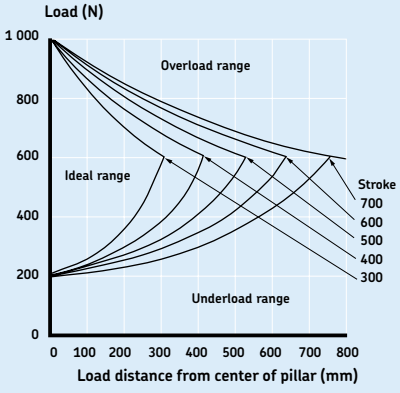

Bending load diagram 3-section

Safety factor load conditions

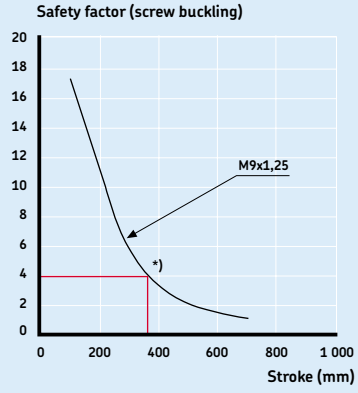

* Safety factor = 4

Ordering key



Type

Tube set:
Tube set 2× A
Tube set 3× D

Control:
Electrical control S
Pneumatic control K
Low-voltage control *N*

Voltage:
230 V AC/50 Hz, IP 30 (no code)
120 V AC/60 Hz, IP 20 2
Special voltage 9

Type of protection /test:
Standard IP30 (no code)
UL test *U*

Construction:
Push load 0
Customer-specific *1*
Pull load 3

Stroke (S):
200 mm (only for tube set 2×) 2
300 mm 3
400 mm 4
500 mm 5
600 mm 6
700 mm 7

Options shown in italics are only available on demand. Contact SKF for more information on minimum quantities and additional costs.

Accessories

	Designation	Order N°
Top mounting plate for 2 × tube set	SPL–964280	M/0125629
Bottom mounting plate for 2 × tube set	SPL–964281	M/0125630
Top mounting plate for 3 × tube set	SPL–964280	M/0125629
Bottom mounting plate for 3 × tube set	SPL–965121	M/0125631
Screw (4/plate), only for 2 × tube set, bottom plate	ZBE–510751	M/0125368
Screw (4/plate), only for 3 × tube set, bottom plate	ZBE–510709	M/0125560
Lock washer (4/plate)	ZBE–510024	M/0125339
Plug AC Telemag 3–pin	SEL–265518	M/0124866
Plug AC Telemag 5–pin	SEL–265519	M/0124864



Telescopic pillars – DC versions

CPI 60

TLG 64

TLT 68

TFG 72

THG 76

CAWA 80

TXG 84

TMA 88

TMD 92

Telescopic pillar Telemag CPI

Benefits

- Push or pull load
- Fast movement
- Robust and stable design
- T-slotted outer tube

Standards

- EN 60950–1
- IEC 60950–1
- UL 60950–1



Suitable control units and accessories

Control units

	LD	SCU 1	SCU 5	SCU 9	VCU 5	VCU 8	VCU 9	BCU 5	BCU 8
CPI	●	●	●	●	●	●	●	●	●
EHA 3		●	●	●	●	●	●	●	●
STJ		●	●	●	●	●	●	●	●
STE		●	●	●	●	●	●	●	●
LD-034.000.004	●								
LD-011.031.000	●								

Hand switch
Foot switch
Desk switch

Dimensional drawing

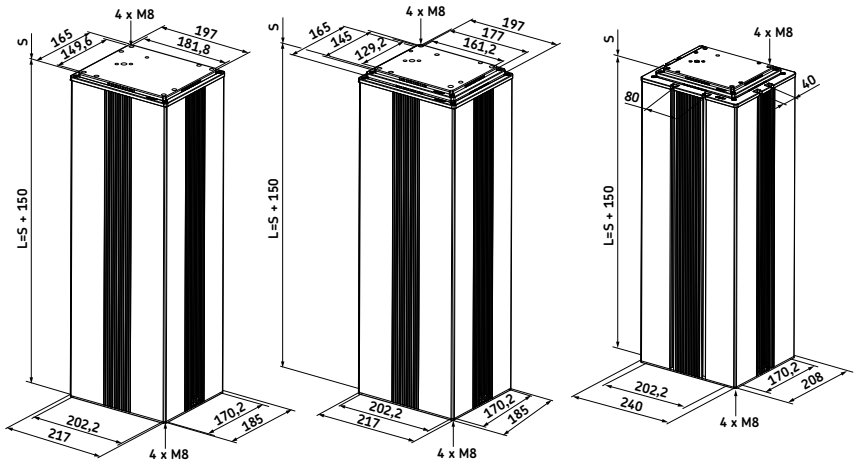

2-section 3-section 2- or 3-section with slots

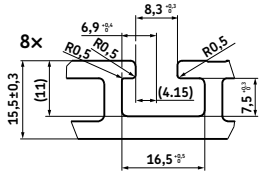

Legend:
S = stroke
L = retracted length

Connecting diagram

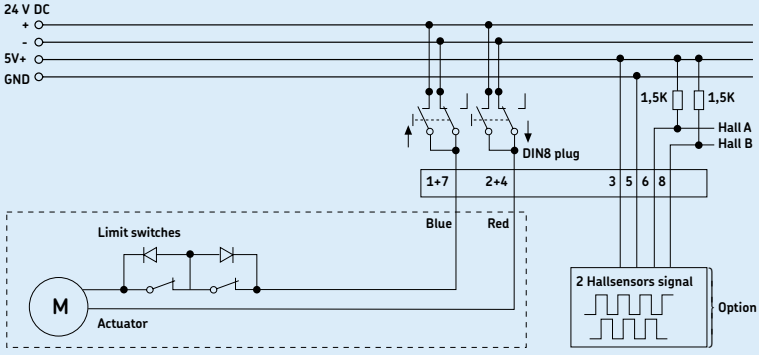

Technical data

	Unit	CPI10-D	CPI10-E	CPI10-F
Max. push force	N	1 000	1 500	4 000
Max. pull force	N	1 000	1 500	4 000
Dynamic bending moment (2-section)	Nm	250	250	250
Dynamic bending moment (3-section)	Nm	max. 1 000	max. 1 000	max. 1 000
Speed (full load)	mm/s	31	22	11
Speed (no load)	mm/s	38	28	17
Stroke	mm	200 to 700	200 to 700	200 to 700
Retracted length	mm	S+150	S+150	S+150
Voltage	V DC	24	24	24
Power	W	91,2	96	144
Current	A	3,8	4	6
Duty cycle: intermittent operation	min.	2 min./8 min.	2 min./8 min.	1 min./9 min.
Ambient temperature	°C	+10 to +40	+10 to +40	+10 to +40
Type of protection	IP	30	30	30
Protection class	–	III/SELV	III/SELV	III/SELV
Type of control	–	electrical	electrical	electrical
Weight (2-section)	kg	13 to 30	13 to 30	13 to 30
(3-section)		14 to 34	14 to 34	14 to 34

Performance diagrams

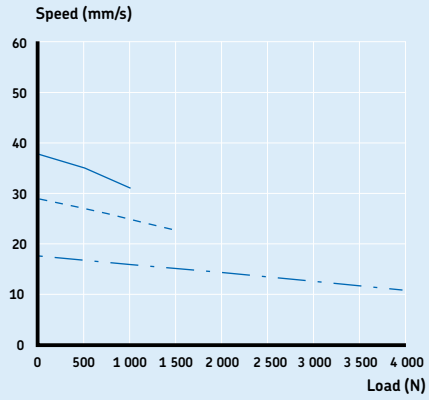

Speed-load diagram — CPI10–D, CPI10–E, CPI10–F

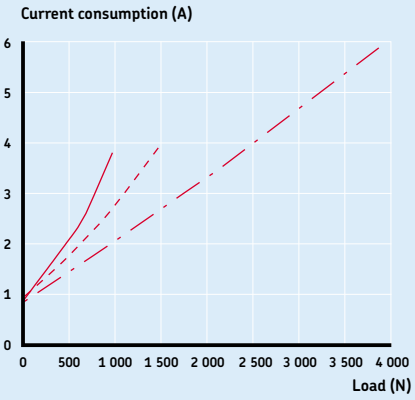

Current-load diagram — CPI10–D, CPI10–E, CPI10–F

Bending load diagrams

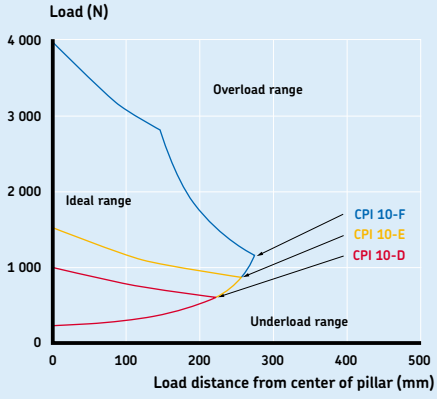

Load diagram 2-section

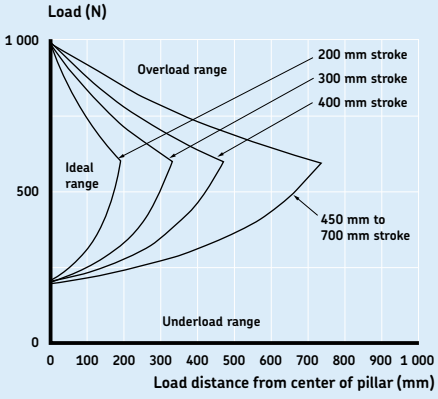

Load diagram 3-section CPI10–D

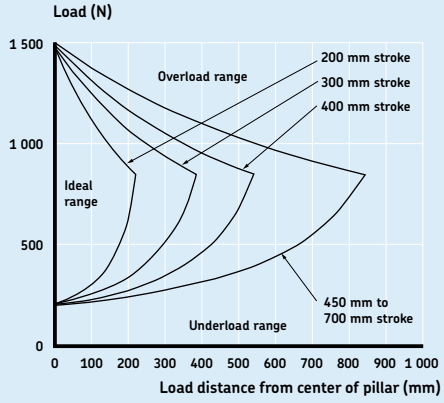

Load diagram 3-section CPI10–E

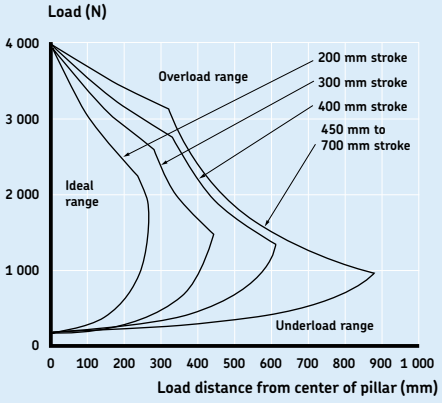

Load diagram 3-section CPI10–F

Ordering key

CPI10-□T□□□□□□0□-000

Type

Voltage:
24 V DC

Load:

Push (N)	Pull (N)	Speed (mm/s)	
1 000	1 000	31	D
1 500	1 500	22	E
4 000	4 000	11	F

Tube set:

2-section	2
3-section	3
2-section T-slotted outer tube	4
3-section T-slotted outer tube	5

Stroke (S):

200 mm	200
250 mm	250
300 mm	300
350 mm	350
400 mm	400
450 mm	450
500 mm	500
550 mm	550
600 mm	600
650 mm	650
700 mm	700
Other stroke lengths	*XXX*

Electrical options:

None	0
2-Hall encoder	*F*
Lifetime monitoring	*M*
2-Hall encoder and lifetime monitoring	*N*

Cable through option:

None	0
Mains cable feedthrough, protection class I (retracted length +30 mm) max 250 V AC, max 10 A	C

Special:

None	0
Back-up nut (only for 4 000 N version)	B

Options shown in italics are only available on demand. Contact SKF for more information on minimum quantities and additional costs.

Accessories

	Designation	Order N°
Top mounting plate (without T-slot), Bore 202,2×170,2 mm	ZBE–333426	M/0126542
Top mounting plate (with T-slot), Bore 202,2×170,2	ZBE–333434	M/0126543
Bottom mounting plate 3-section, Bore 161,2×129,2 mm	ZBE–333428	M/0126541
Bottom mounting plate 2-section, Bore 181,8×149,6 mm	ZBE–333427	M/0126540
Screw for bottom mounting plates M10×25 (1 screw required)	ZBE–510978	M/0125359
Screw for top mounting plates M8×36 (4 screws required)	ZBE–530564	M/0126539
Screws for bottom mounting plates M8×35 (4 screws required)	ZBE–530564	M/0126539
Motor cable 2xDIN8, 1 000 mm, black	ZKA–306009–1000	M/0105471
Motor cable 2xDIN8, 1 500 mm, black	ZKA–306009–1500	M/0105472
Motor cable 2xDIN8, 2 500 mm, black	ZKA–306009–2500	M/0105473

Telescopic pillar Telemag TLG

Benefits

- High bending load
- Powerful

Standards

- EN/IEC 60601–1
- UL 60601–1



Suitable control units and accessories

Control units

	SCU 1	SCU 5	SCU 9	VCU 5	VCU 8	VCU 9	BCU 5	BCU 8	MCU
TLG	●	●	●	●	●	●	●	●	●
EHA1									●
EHA3	●	●	●	●	●	●	●	●	
STF									●
STJ	●	●	●	●	●	●	●	●	
STA									●
STE	●	●	●	●	●	●	●	●	

Hand switch
Foot switch
Desk switch

Connecting diagram*

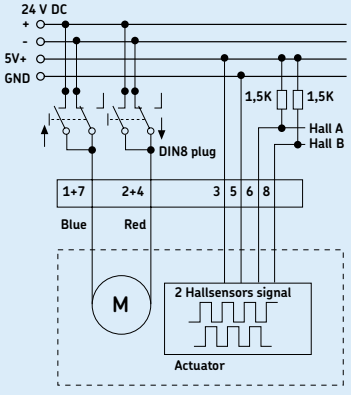

* Only valid with TLG11. TLG10 must be operated by a BCU, MCU, SCU or VCU control unit.

Dimensional drawing

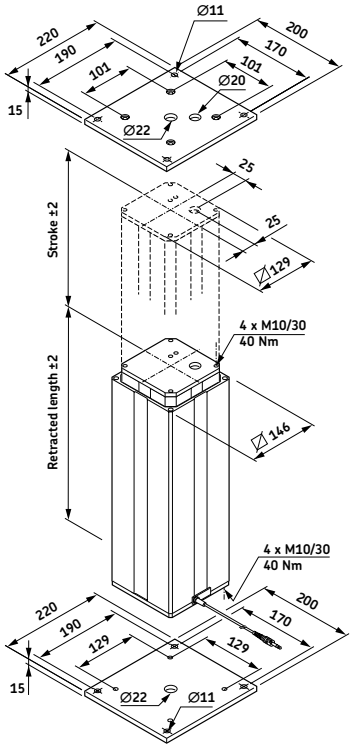

2-section

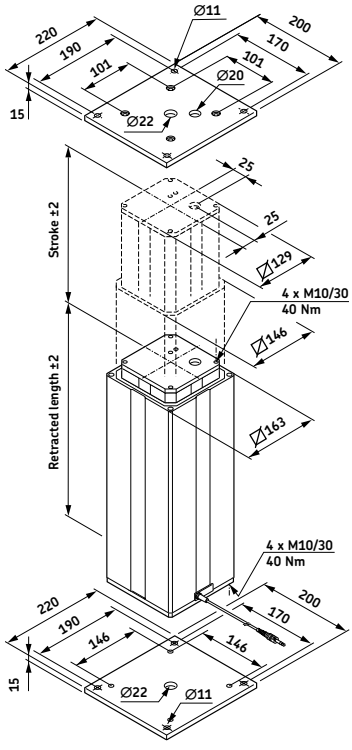

3-section

Legend:
S = stroke
L = retracted length

Note: mounting plates are not included.
To be ordered separately.

Technical data

	Unit	TLG 10/11–A	TLG 10/11–B	TLG 10/11–C
Rated push load	N	4 000	2 500	1 500
Rated pull load	N	0	0	0
Bending load	Nm	up to 2 800*	up to 1 750*	up to 950*
Speed (full load to no load)	mm/s	10 to 14	13 to 17	25 to 33
Telescopic pillar version	# of section	2 or 3-section	2 or 3-section	2 or 3-section
Stroke	mm	200 to 700	200 to 700	200 to 700
Retracted length	mm	S+180	S+180	S+180
Voltage	V DC	24	24	24
Power	W	156	156	156
Current	A	6,5	6,5	6,5
Duty cycle: intermittent operation	min.	1 min./9 min	1 min./9 min	1 min./9 min
Ambient temperature	°C	+10 to +40	+10 to +40	+10 to +40
Type of protection	IP	30	30	30
Protection class	–	SELV	SELV	SELV
Type of control	–	electrical	electrical	electrical
Weight	kg	15 to 30	15 to 30	15 to 30

* For details, please see bending load diagrams

Performance diagrams

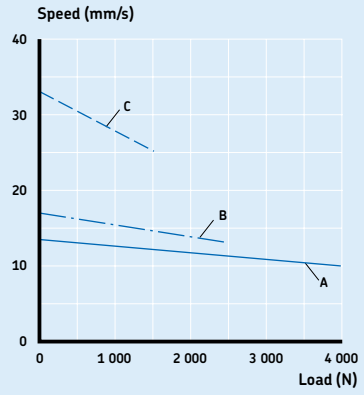

Speed-load diagram

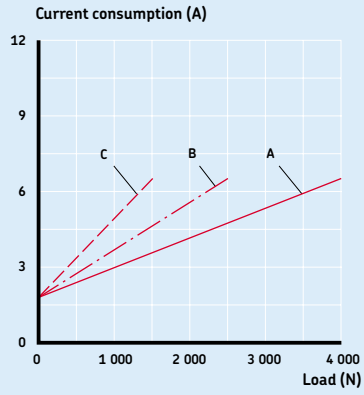

Current-load diagram

Bending load diagrams

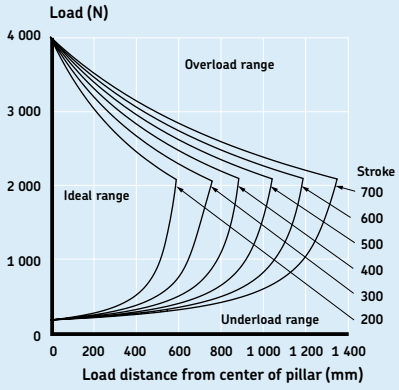

Bending load diagram TLG ...AD

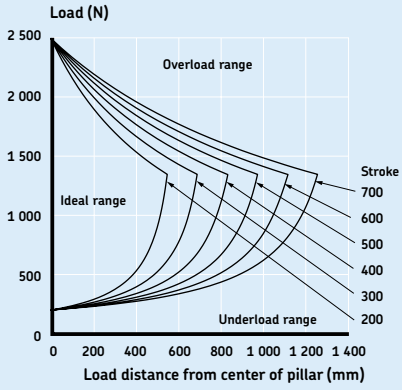

Bending load diagram TLG ...BD

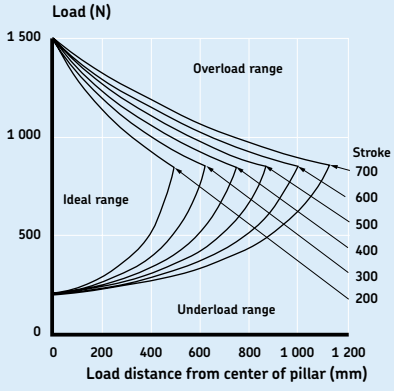

Bending load diagram TLG ...CD

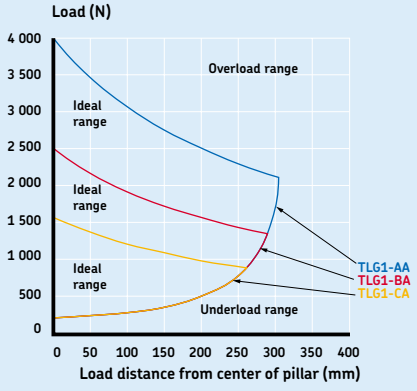

Bending load diagram TLG...AA/BA/CA

Ordering key

TLG1 ☐ – ☐ ☐ ☐ ☐ ☐ – 000

Type

Voltage:
24 V DC 0
24 V DC with integrated current cut-off *1*

Load:
4 000 N A
2 500 N B
1 500 N C

Tube set:
Tube set 2× A
Tube set 3× D

Stroke (S):
200 mm 2
300 mm 3
400 mm 4
500 mm 5
600 mm 6
700 mm 7

Cable / connecting plug:
Straight, 1,0 m / jack plug *1*
Straight, 2,3 m / jack plug 2
Coiled, 0,6 m / jack plug *A*
Straight, 1,0 m / DIN8 plug 3
Straight, 2,3 m / DIN8 plug 4
Coiled, 0,6 m / DIN8 plug B

Option:
No option 0
1-Hall encoder, 8 pulses, cable with jack plug A
Potentiometer, 1 kΩ, 2 Watt, 0,25 % linearity, 10 turns *B*
Cable feedthrough, 5 × 0,75 mm², led out, top +160 mm, bottom +800 mm *C*
Cable feedthrough, 1-Hall encoder *D*
Cable feedthrough, potentiometer *E*
2-Hall encoder, cable with DIN8 plug F
Cable feedthrough, 2-Hall encoder, cable with DIN8 plug *G*

Options shown in italics are only available on demand. Contact SKF for more information on minimum quantities and additional costs.

Safety factor load conditions

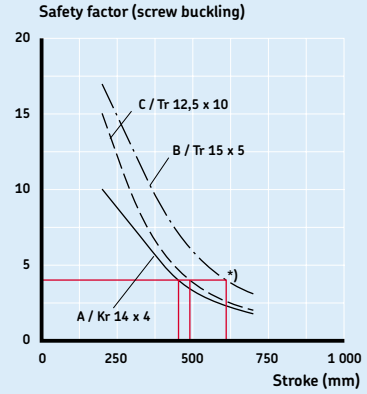

* Safety factor = 4

Accessories

	Designation	Order N°
Top mounting plate for 2 × tube set	SPL–290268	M/0125624
Bottom mounting plate for 2 × tube set	SPL–290351	M/0125625
Top mounting plate for 3 × tube set	SPL–290268	M/0125624
Bottom mounting plate for 3 × tube set	SPL–290265	M/0125623
Screw (4/plate) for mounting plate	ZBE–510707	M/0125360

Telescopic pillar Telemag TLT

Benefits

- Very small built-in dimension
- Powerful

Standards

- EN/IEC 60601–1
- UL 60601–1



Suitable control units and accessories

	Control units							
	SCU 1	SCU 5	SCU 9	VCU 5	VCU 8	VCU 9	BCU 5	BCU 8
TLT	●	●	●	●	●	●	●	●
EHA3	●	●	●	●	●	●	●	●
STJ	●	●	●	●	●	●	●	●
STE	●	●	●	●	●	●	●	●

Hand switch
Foot switch
Desk switch

Connecting diagram*

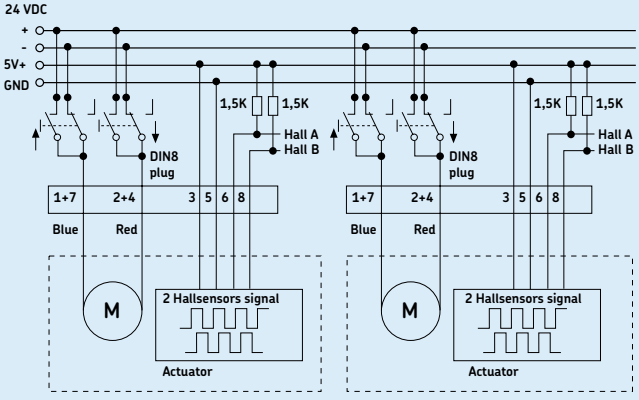

* Only valid with TLT11. TLT10 must be operated by a BCU, SCU or VCU control unit.

Dimensional drawing

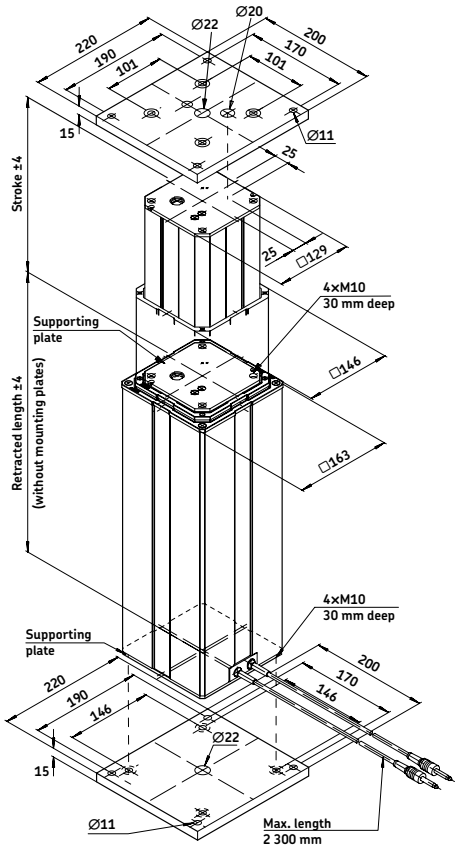

Legend:
S = stroke
L = retracted length

Note: mounting plates are not included.
To be ordered separately.

Technical data

	Unit	TLT10–A1	TLT10–A2	TLT10–B1	TLT10–C1	TLT10–C2
Rated push load	N	3 000	4 000	2 000	1 000	2 000
Rated pull load	N	0	0	0	0	0
Bending load	Nm	up to 400*	up to 1 000*	up to 250*	up to 110*	up to 480*
Speed (full load to no load)	mm/s	11 to 16	13 to 19	13 to 19	25 to 36	25 to 42
Telescopic pillar version	# of section	3-section	3-section	3-section	3-section	3-section
Stroke	mm	300 to 700	300 to 700	300 to 700	300 to 700	300 to 700
Retracted length	mm	0,5 × S+170	0,5 × S+240	0,5 × S+170	0,5 × S+170	0,5 × S+240
Voltage	V DC	24	24	24	24	24
Power	W	168	168	192	192	216
Current	A	2×3,5	2×3,5	2×4,0	2×4,0	2×4,5
Duty cycle: intermittent operation	min.	1 min./9 min	1 min./9 min	1 min./9 min	1 min./9 min	1 min./9 min
Ambient temperature	°C	+10 to +40	+10 to +40	+10 to +40	+10 to +40	+10 to +40
Type of protection	IP	40	40	40	40	40
Protection class	–	SELV	SELV	SELV	SELV	SELV
Type of control	–	electrical	electrical	electrical	electrical	electrical
Weight	kg	15 to 30	15 to 30	15 to 30	15 to 30	15 to 30

* For details, please see bending load diagrams

Performance diagrams

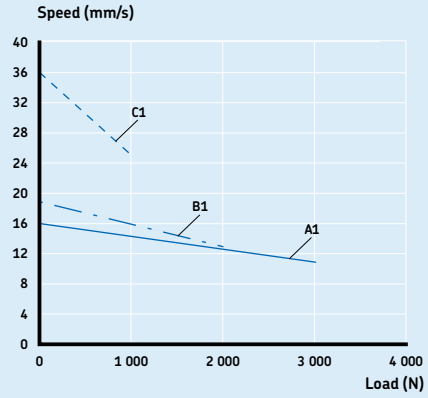

Speed-load diagram

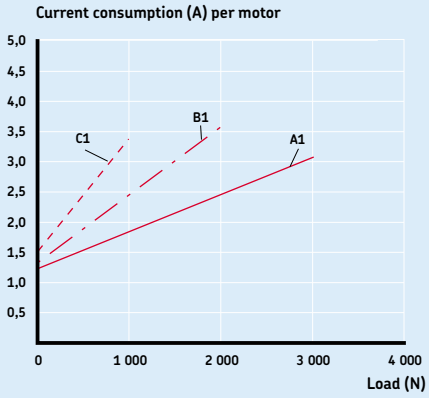

Current-load diagram

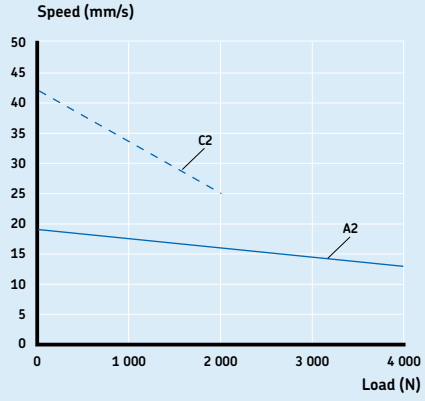

Speed-load diagram

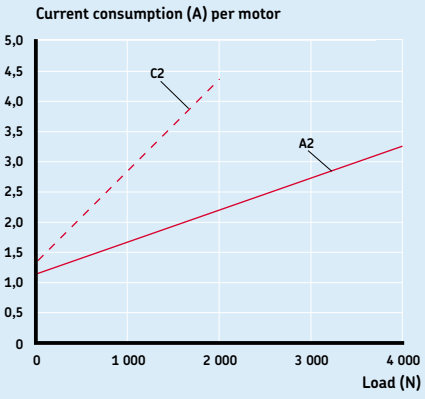

Current-load diagram

Bending load diagrams

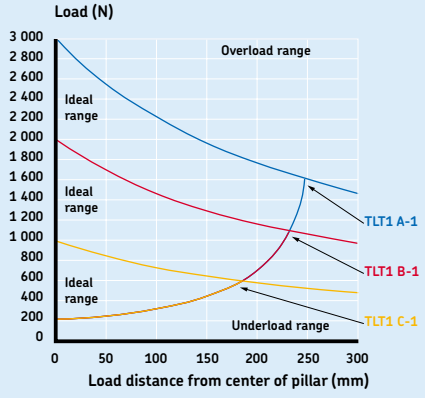

Bending load diagram A1, B1, C1

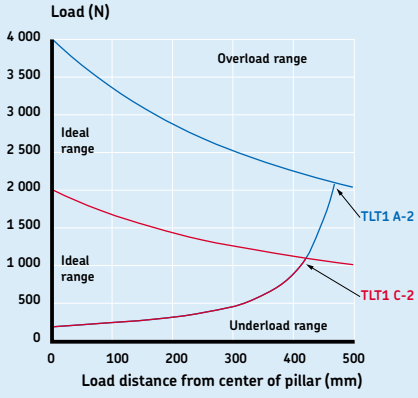

Bending load diagram A2, C2

Ordering key

TLT1 □ – □□ □ □ □ – 000

Type

Voltage:

24 V DC	0
24 V DC with integrated current cut-off (only for A2 and C2)	*1*

Load / Speed:

4 000 N	A2
3 000 N	A1
2 000 N / 19 to 13 mm/s	B1
2 000 N / 42 to 25 mm/s	C2
1 000 N	C1

Stroke (S):

300 mm	3
400 mm	4
500 mm	5
600 mm*	6
700 mm*	7

Cable / connecting plug:

Straight, 1,0 m / jack plug	*1*
Straight, 2,3 m / jack plug	2
Coiled, 0,6 m / jack plug	*A*
Straight, 1,0 m / DIN8 plug	3
Straight, 2,3 m / DIN8 plug	4
Coiled, 0,6 m / DIN8 plug	*B*

Option:

No option	0
1-Hall encoder, 8 pulses, cable with jack plug	A
Cable feedthrough, 3x1,5 mm², top +160 mm, bottom +800 mm	*C*
Cable feedthrough, 1-Hall encoder	*D*
2-Hall encoder, cable with DIN8 plug	*F*

Options shown in italics are only available on demand. Contact SKF for more information on minimum quantities and additional costs.

***** *Reduced safety factor*

Accessories

	Designation	Order N°
Top mounting plate	SPL–290268	M/0125624
Bottom mounting plate	SPL–290265	M/0125623
Screw (4/plate) for mounting plate	ZBE–510707	M/0125360

Telescopic pillar Telemag TFG

Benefits

- Push or pull load
- Compact design
- Fast movement
- Powerful
- Plug and play

Standards

- EN/IEC 60601–1
- UL 60601–1



Suitable control units and accessories

Control units

	SCU 1	SCU 5	SCU 9	VCU 5	VCU 8	VCU 9	BCU 5	BCU 8	LD 014	LD 015
TFG 10	●	●	●	●	●	●	●	●	●	●
EHA 3	●	●	●	●	●	●	●	●		
STJ	●	●	●	●	●	●	●	●		
STE	●	●	●	●	●	●	●	●		
LD-034.000.004									●	●
LD-011.031.000									●	●

Hand switch
Foot switch
Desk switch

Connecting diagram

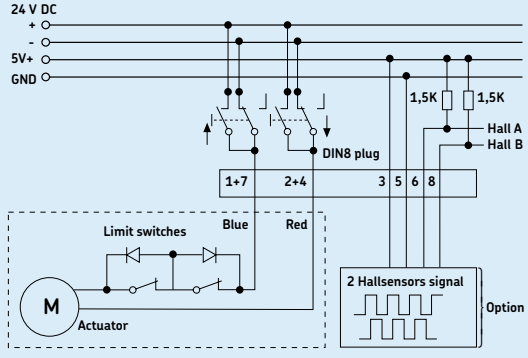

Dimensional drawing

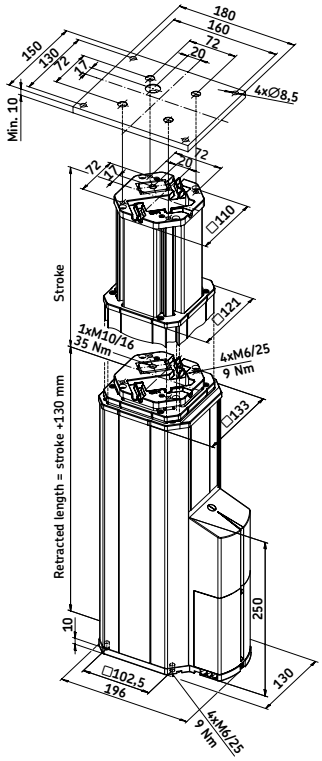

Legend:
S = stroke
L = retracted length

Note: mounting plates are not included.
To be ordered separately.

Technical data

	Unit	TFG 10
Rated push load	N	2 500
Rated pull load	N	2 500
Bending load	Nm	up to 500*
Speed (full load to no load)	mm/s	15 to 19
Telescopic pillar version	# of section	3-section
Stroke	mm	200 to 700
Retracted length	mm	S+130
Voltage	V DC	24
Power	W	120
Current	A	5
Duty cycle: intermittent operation	min.	1 min./9 min.
Duty cycle: short-time operation	min.	3
Ambient temperature	°C	+10 to +40
Type of protection	IP	30
Protection class	–	SELV
Type of control	–	electrical
Weight	kg	8 to 19

* For details, please see bending load diagrams

Performance diagrams

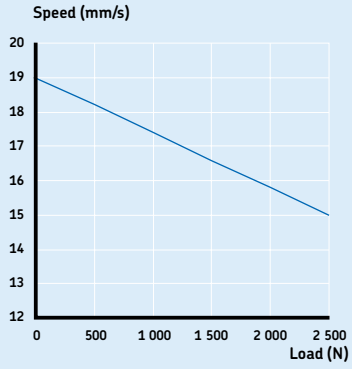

Speed-load diagram

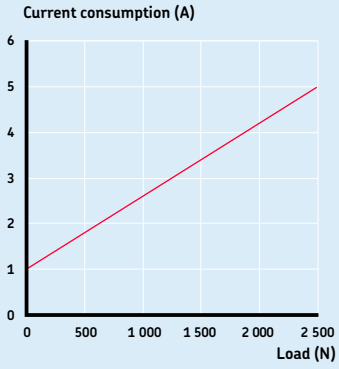

Current-load diagram

Bending load diagrams

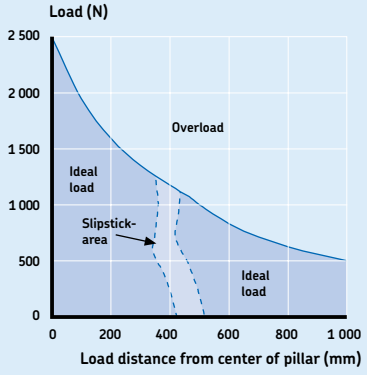

200 mm stroke

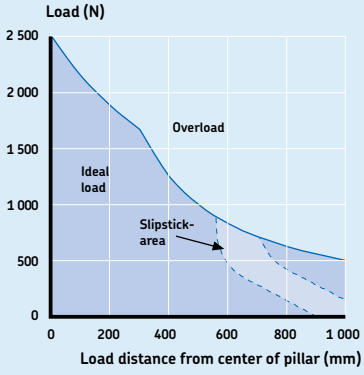

300 mm stroke

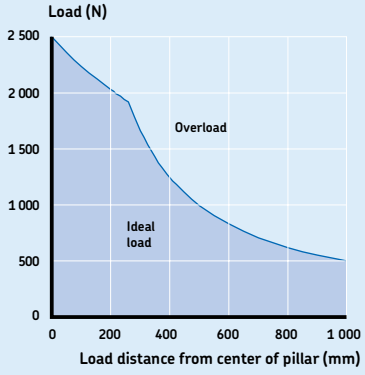

400 mm stroke

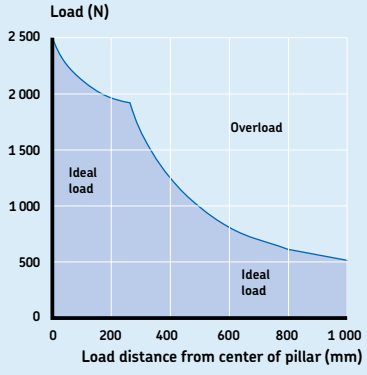

500 mm stroke

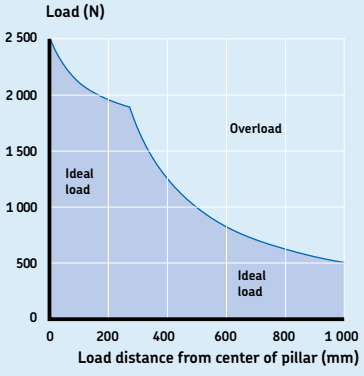

600 mm stroke

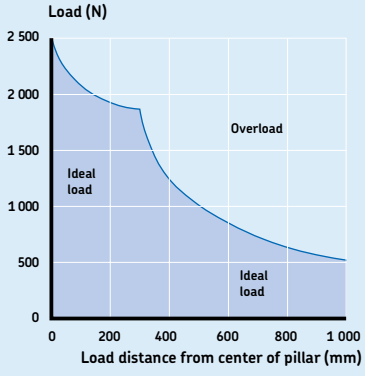

700 mm stroke

Ordering key

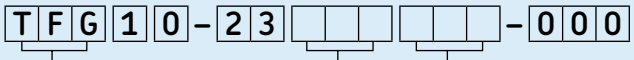

Type

Stroke (S):

200 mm	200
250 mm	250
300 mm	300
350 mm	350
400 mm	400
500 mm	500
700 mm	700

Option:

No option	000
With 2-Hall encoder, 14 pulses per 9 mm travel	E
With mains cable feedthrough (3×AWG16)	C
With control cable feedthrough (10×AWG28)	H

Accessories

	Designation	Order N°
Top mounting plate Bore 72 × 72 mm	SMT–333360	M/0124808
Bottom mounting plate Bore 102,5 × 102,5 mm	SMT–264363	M/0124814
Screw for top mounting plate M10 × 25 (1 screw required)	ZBE–510978	M/0125359
Screw for top mounting plate M6 × 30 (4 screws required)	ZBE–510709	M/0125560
Screw for bottom mounting plate M6 × 30 (4 screws required)	ZBE–510709	M/0125560
Mains cable SEV plug 3 000 mm, black, 3 × 0.75 mm^2	ZKA–304345	M/0125331
Mains cable Schuko plug 3 000 mm, black, 3 × 0.75 mm^2	ZKA–304346–3000	M/0121729
Mains cable US plug 3 000 mm, black, 3 × 0.75 mm^2	ZKA–304347–3000	M/0121762
Mains cable British Standard plug 3 000 mm, black, 3 × 0.75 mm^2	ZKA–304355–3000	M/0121755

Telescopic pillar Telemag THG

Benefits

- Compact design
- Robust

Standards

- EN/IEC 60601–1
- UL 60601–1



Suitable control units and accessories

Control units

	SCU 1	SCU 5	SCU 9	VCU 5	VCU 8	VCU 9	BCU 5	BCU 8	MCU
THG	●	●	●	●	●	●	●	●	●
EHA 1									●
EHA 3	●	●	●	●	●	●	●	●	
STF									●
STJ	●	●	●	●	●	●	●	●	
STA									●
STE	●	●	●	●	●	●	●	●	

Hand switch
Foot switch
Desk switch

Connecting diagram*

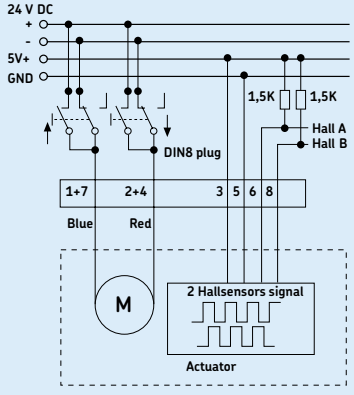

* Only valid with THG11. THG10 must be operated by a BCU, SCU or VCU control unit.

Dimensional drawing

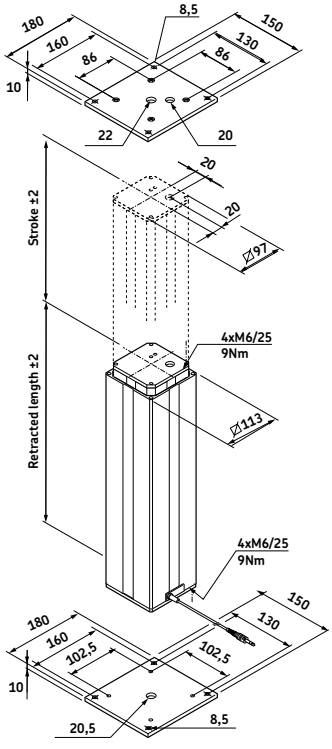

2-section

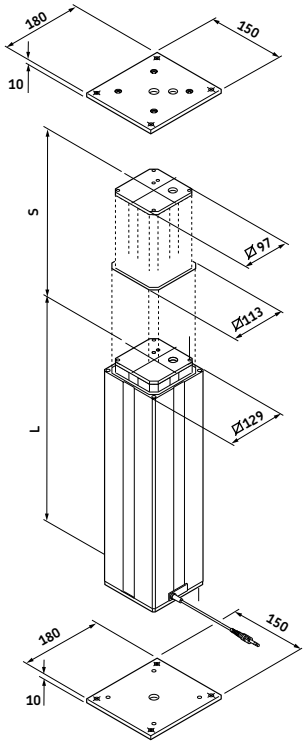

3-section

Legend:
S = stroke
L = retracted length

Note: mounting plates are not included.
To be ordered separately.

Technical data

	Unit	THG 10/11–BA	THG 10/11–CA	THG 10/11–BD	THG 10/11–CD
Rated push load	N	2 000	1 000	2 000	1 000
Rated pull load	N	0	0	0	0
Bending load	Nm	up to 250*	up to 120*	up to 1 000*	up to 450*
Speed (full load to no load)	mm/s	5 to 7	12 to 15	5 to 7	12 to 15
Telescopic pillar version	# of section	2-section	2-section	3-section	3-section
Stroke	mm	200 to 700	200 to 700	200 to 700	200 to 700
Retracted length	mm	S+270	S+270	S+180	S+180
Voltage	V DC	24	24	24	24
Power	W	120	120	120	120
Current	A	5	5	5	5
Duty cycle: intermittent operation	min.	1 min./9 min.	1 min./9 min	1 min./9 min	1 min./9 min
Ambient temperature	°C	+10 to +40	+10 to +40	+10 to +40	+10 to +40
Type of protection	IP	30	30	30	30
Protection class	–	SELV	SELV	SELV	SELV
Type of control	–	electrical	electrical	electrical	electrical
Weight	kg	8 to 14	8 to 14	8 to 14	8 to 14

* for details, please see bending load diagrams

Performance diagrams

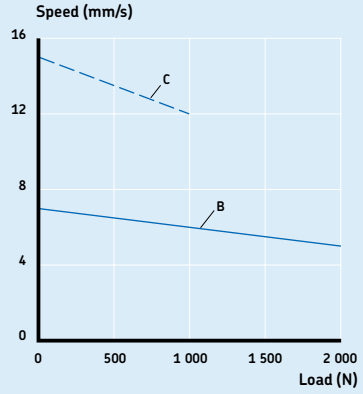

Speed-load diagram

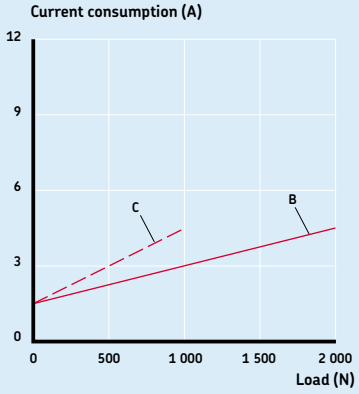

Current-load diagram

Bending load diagrams

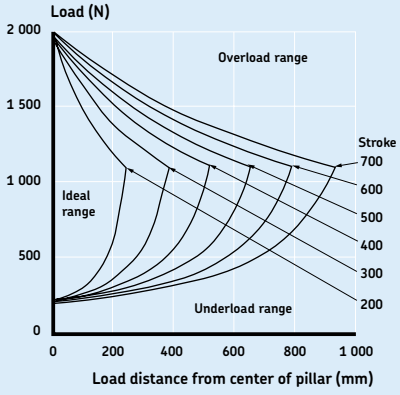

Bending load diagram THG...BD

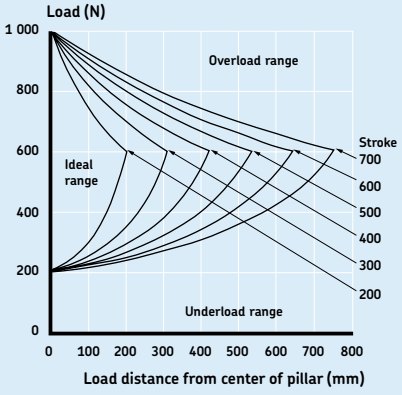

Bending load diagram THG...CD

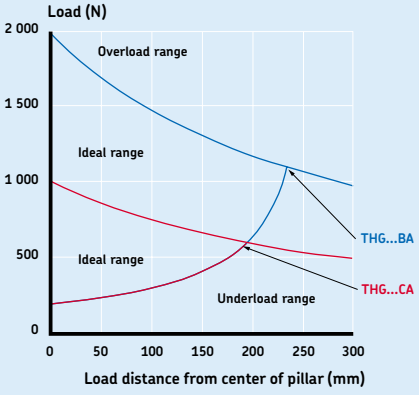

Bending load diagram THG...BA/CA

Safety factor load conditions

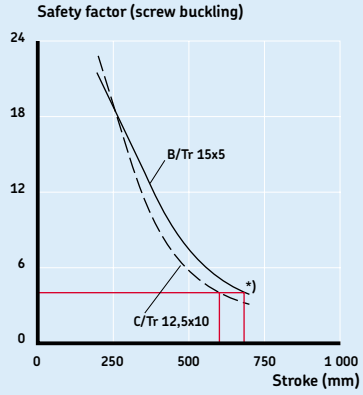

* Safety factor = 4

Ordering key

THG1 ☐ – ☐ ☐ ☐ ☐ ☐ – 000

Type

Voltage:
24 V DC 0
24 V DC with integrated current cut-off *1*

Load:
2 000 N B
1 000 N *C*

Tube set:
Tube set 2× A
Tube set 3× D

Stroke (S):
200 mm 2
300 mm 3
400 mm 4
500 mm 5
600 mm 6
700 mm 7

Cable / connecting plug:
Straight, 1,0 m / jack plug *1*
Straight, 2,3 m / jack plug 2
Coiled, 0,6 m / jack plug *A*
Straight, 1,0 m / DIN8 plug 3
Straight, 2,3 m / DIN8 plug 4
Coiled, 0,6 m / DIN8 plug B

Option:
No option 0
1-Hall encoder, 8 pulses, cable with jack plug A
Potentiometer, 1 kΩ, 2 Watt, 0,25 % linearity, 10 turns (tube set 3× only) *B*
Cable feedthrough, 5 × 0,75 mm², top +160 mm, bottom +800 mm *C*
Cable feedthrough, 1-Hall encoder *D*
Cable feedthrough, potentiometer (tube set 3× only) *E*
2-Hall encoder, cable with DIN8 plug *F*
Cable feedthrough, 2-Hall encoder, cable with DIN8 plug *G*

Options shown in italics are only available on demand. Contact SKF for more information on minimum quantities and additional costs.

Accessories

	Designation	Order N°
Top mounting plate for 2 × tube set	SPL–264265	M/0125688
Bottom mounting plate for 2 × tube set	SMT–264363	M/0124814
Top mounting plate for 3 × tube set	SPL–264265	M/0125688
Bottom mounting plate for 3 × tube set	SPL–264237	M/0125622
Screw (4/plate) for mounting plate (2 tube set)	ZBE–510709	M/0125560
Screw (4/plate) for mounting plate (3 tube set)	ZBE–510707	M/0125360

Telescopic pillar
CAWA linear drive profile

Benefits

- Compact
- Lubricated for service life
- High operating reliability
- Selection of front attachments
- Powerful



Connecting diagram

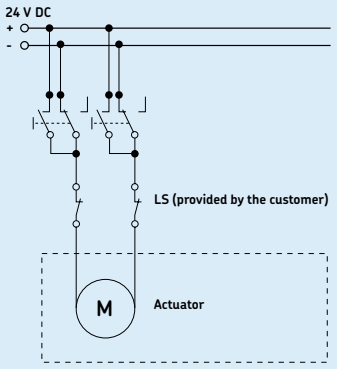

Dimensional drawing

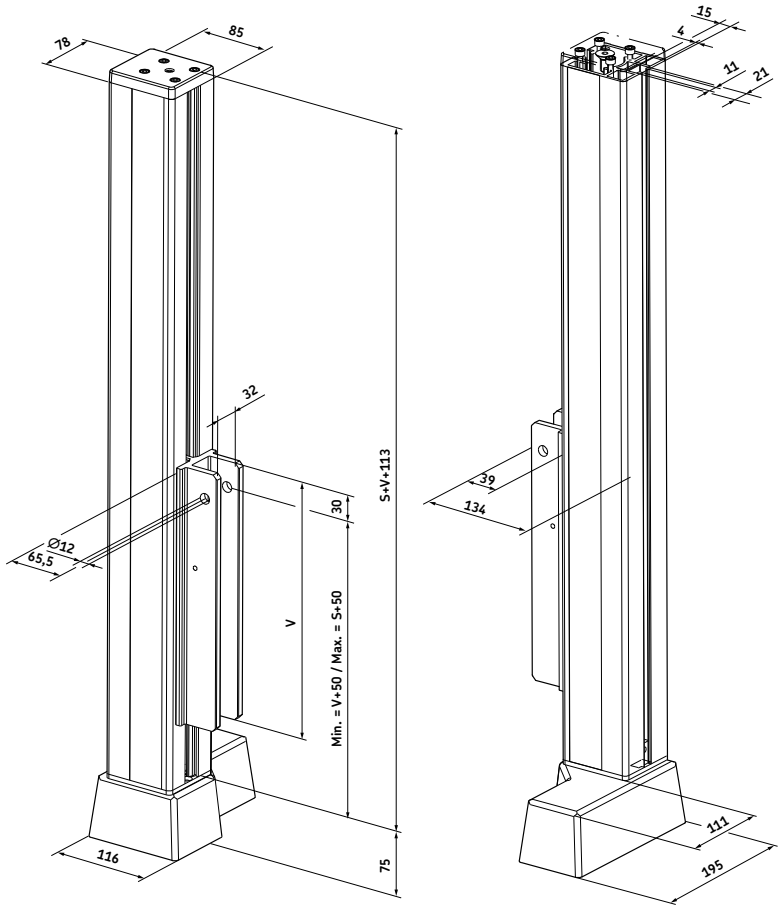

Legend:
S = stroke
L = retracted length
V = carriage (295, 395 or 495 mm)

Technical data

	Unit	CAWA
Rated push load	N	1 650
Rated pull load	N	0
Speed (full load to no load)	mm/s	14 to 22
Telescopic pillar version	#of section	N/A
Stroke	mm	500 to 1 000
Retracted length	mm	S+V+113+75
Voltage	V DC	24
Power	W	132
Current	A	5,5
Duty cycle: intermittent operation	min.	1 min./9 min.
Ambient temperature	°C	+5 to +40
Type of protection	IP	20
Protection class	–	SELV
Type of control	–	electrical
Weight	kg	10 to 15

Performance diagrams

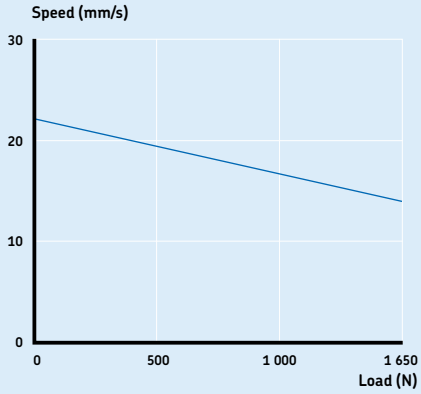

Speed-load diagram

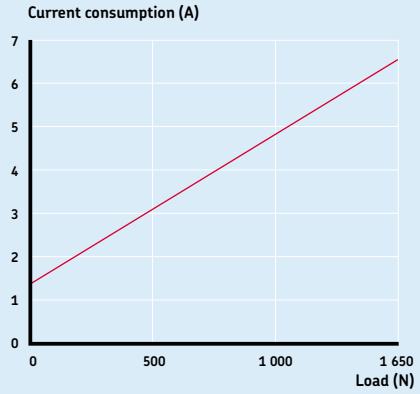

Current-load diagram

Ordering key

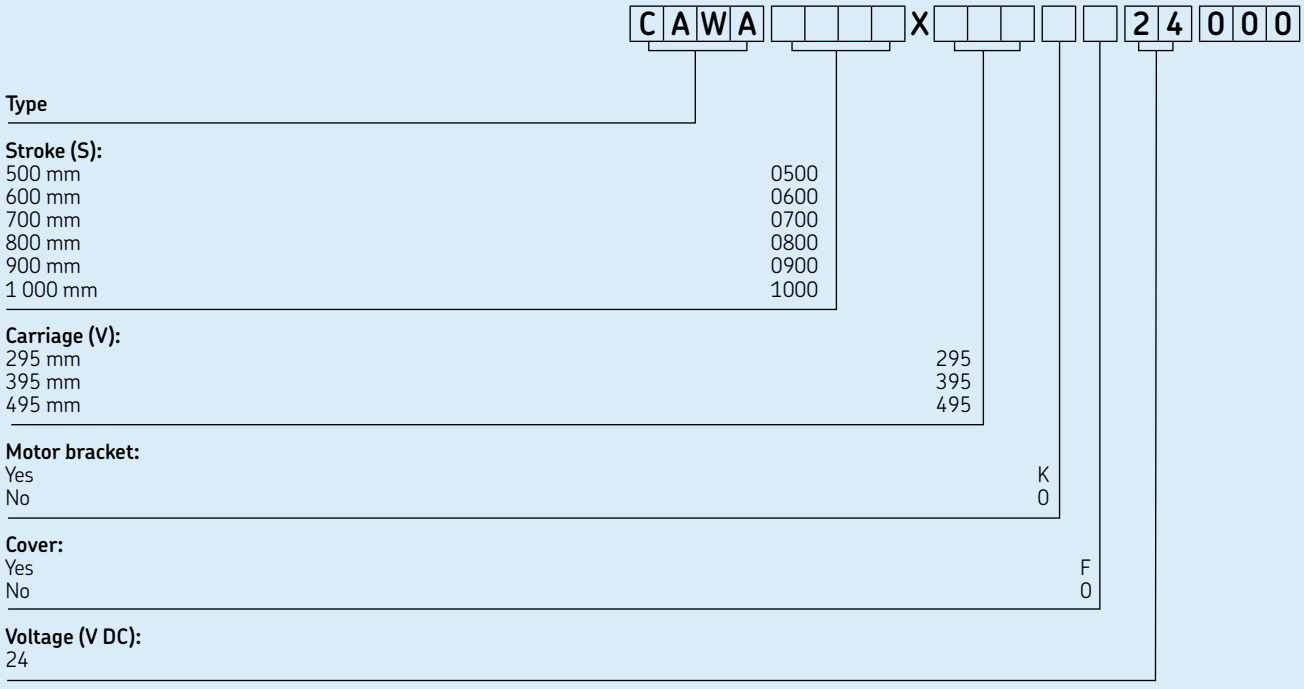

Telescopic pillar Telesmart TXG

Benefits

- Powerful and fast lifting
- Aesthetic design

Standards

- EN/IEC 60601–1
- UL 60601–1



Suitable control units and accessories

	Control units						
	VCU 5	VCU 8	VCU 9	BCU 5	BCU 8	LD 014	LD 015
TXG 1	●	●	●	●	●	●	●
EHA3	●	●	●	●	●		
STJ	●	●	●	●	●		
STE	●	●	●	●	●		
LD-034.000.004						●	●
LD-011.031.000						●	●

Hand switch
Foot switch
Desk switch

Connecting diagram

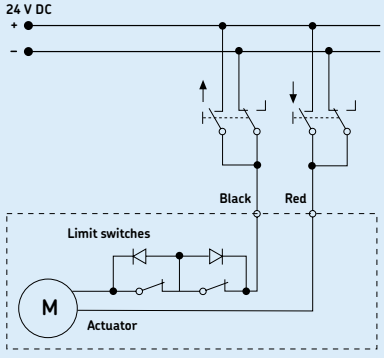

Dimensional drawing

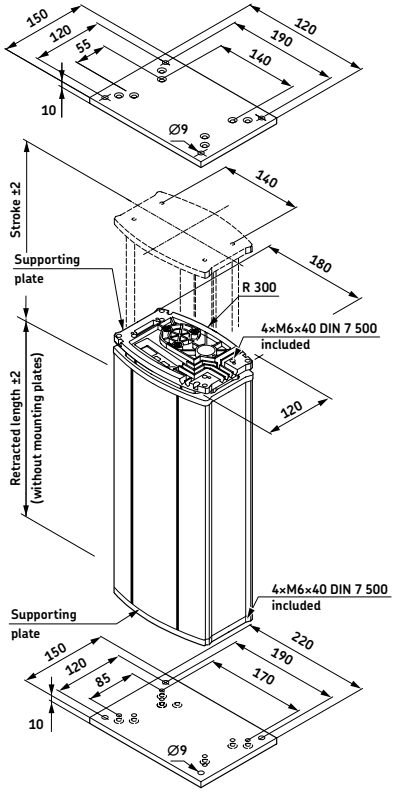

Legend:
S = stroke
L = retracted length

Note: mounting plates are not included. To be ordered separately.

Technical data

	Unit	TXG1
Rated push load	N	1 500
Rated pull load	N	0
Bending load	Nm	up to 210*
Speed (full load to no load)	mm/s	17 to 23
Telescopic pillar version	# of section	2-section
Stroke	mm	200 to 600
Retracted length	mm	S+180
Voltage	V DC	24
Power	W	–
Current	A	5
Duty cycle: intermittent operation	min.	1 min./9 min.
Duty cycle: short-time operation	min.	–
Ambient temperature	°C	+10 to +40
Type of protection	IP	30
Protection class	–	SELV
Type of control	–	electrical
Weight	kg	8 to 13

* For details, please see bending load diagrams

Performance diagram

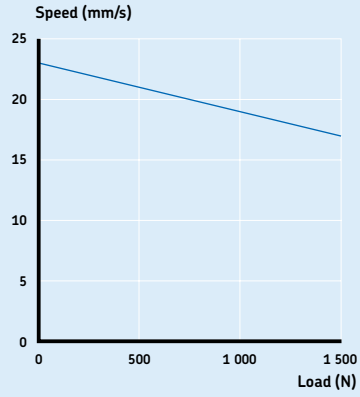

Speed-load diagram

Bending load diagram

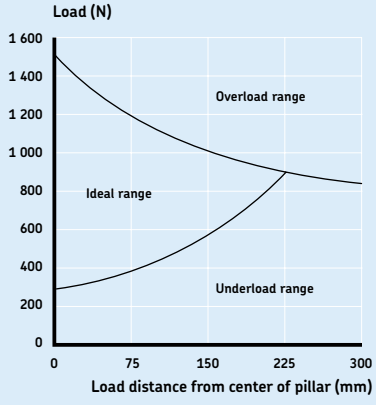

Safety factor load conditions

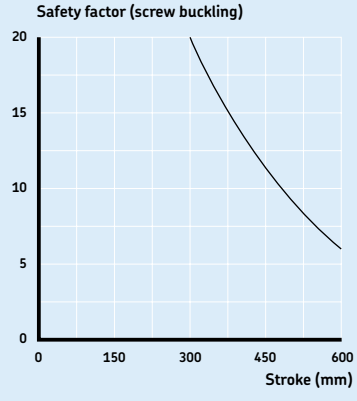

Ordering key



Type

Voltage:
24 V DC (slave actuator) 1

Color:

Natural anodized coating	5
Customer-specific	*K*
Powder-coated white	*2*
Powder-coated grey	*3*

Option:

None	000
1-Hall encoder for LD/slave use	EYS
Connection of TXG to BCU/VCU*	EXG
Customer-specific	*KKK*

Stroke (S) / Retr. length (L=S+180 or L= S+160 mm)	**L=S+180**	**L=S+160**
200 mm	200	*4CY*
300 mm	300	*4DY*
400 mm	400	*4EY*
500 mm	500	*4FY*
600 mm	600	*4GY*

Options shown in italics are only available on demand. Contact SKF for more information on minimum quantities and additional costs.

***** With current cut-off limit switch wiring

Accessories

# of channel	Control unit	Voltage	Frequency	Order number
2–channel	LD–014.255.000	230 V AC	50 Hz	M/0117115
2–channel	LD–015.255.500	120 V AC	60 Hz	M/0117116
4–channel	LD–014.178.000	230 V AC	50 Hz	M/0121090
4–channel	LD–014.178.500	120 V AC	60 Hz	M/0123336

	Desk switch	Function	Order number
	LD–034.000.004	Up and down	M/0123247
	LD–011.031.000	Display and memory	M/0123246

	Cable	Length	Order number
	ZKA–306–355–1000	1 m	M/0121741
	ZKA–306–355–1500	1,5 m	M/0121726
	ZKA–306–355–2500	2,5 m	M/0121742

Telescopic pillar Telesmart TMA

Benefits

- Powerful and fast lifting
- Aesthetic design

Standards

- EN 60335
- UL 60950



Suitable control units and accessories

	Control units	
	LD 014	LD 015
TMA	●	●
LD-034.000.004	●	●
LD-011.031.000	●	●

Hand switch
Foot switch
Desk switch

TMA can only be operated with LD control units.

Dimensional drawing

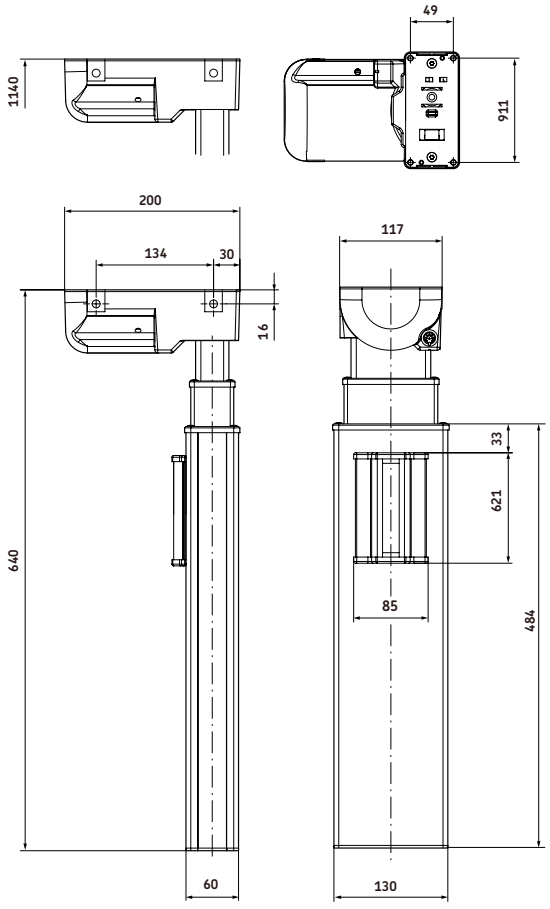

Legend:
S = stroke
L = retracted length

Technical data

	Unit	TMA
Rated push load	N	1 000
Rated pull load	N	0
Bending load	Nm	up to 200*
Speed (full load to no load)	mm/s	35 to 55
Telescopic pillar version	# of section	3-section
Stroke	mm	500
Retracted length	mm	640
Voltage	V DC	24
Power	W	168
Current	A	7
Duty cycle: intermittent operation	min.	1 min./9 min.
Duty cycle: short-time operation	min.	N/A
Ambient temperature	°C	+5 to +40
Type of protection	IP	20
Protection class	–	SELV
Type of control	–	electrical
Weight	kg	8,5

* For details, please see bending load diagrams

Performance diagrams

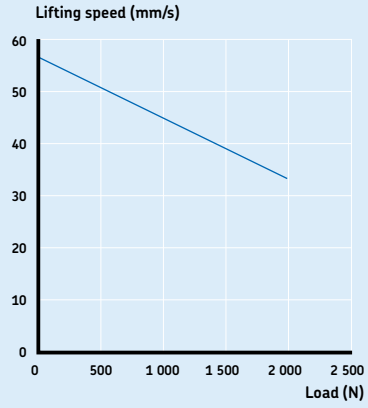

Lifting speed 2-channel control

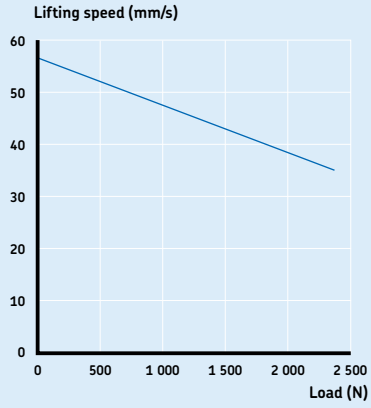

Lifting speed 3-channel control

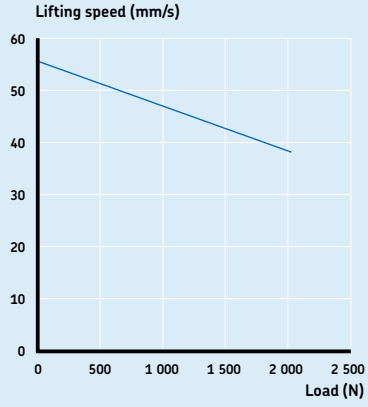

Lifting speed 4-channel control

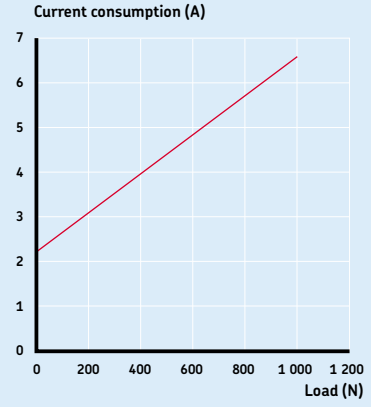

Current-load diagram

Bending load diagrams

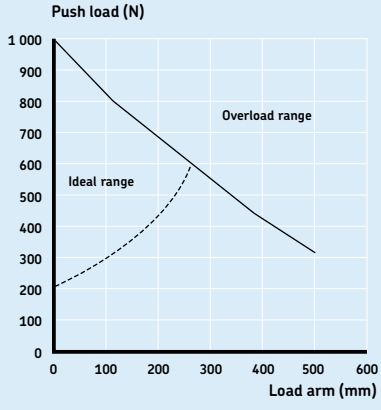

Dynamic stress diagram on X axis
with maximum lift*

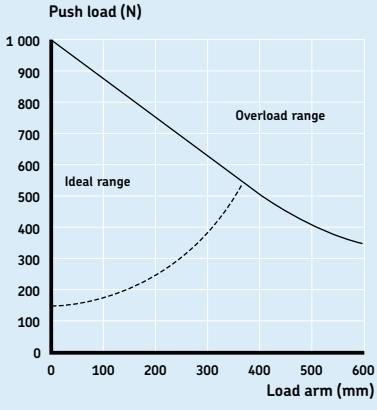

Dynamic stress diagram on Y axis
with maximum lift*

* The values given apply to single lifting pillars. With a stable table structure the ideal field of use can be enlarged.

Ordering key



Type

Color:

Natural anodized coating	5
Black anodized coating	6

Options:

With flange for crossbar one side	EWY
With flange for crossbar two sides	2CM
No flange for crossbar	2CN

Accessories

	Designation	Order N°
Cable 1,0 m with DIN8–plug	ZKA–306355–1000	M/0121741
Cable 1,5 m with DIN8–plug	ZKA–306355–1500	M/0121726
Cable 2,5 m with DIN8–plug	ZKA–306355–2500	M/0121742

Telescopic pillar Telesmart TMD

Benefits

- Powerful and fast lifting
- Aesthetic design
- Efficient retracted length ratio

Standards

- EN 60335
- UL 60950



Suitable control units and accessories

	Control units	
	LD 014	LD 015
TMD	●	●
LD-034.000.004	●	●
LD-011.031.000	●	●

Hand switch
Foot switch
Desk switch

TMD can only be operated with LD control units.

Dimensional drawing

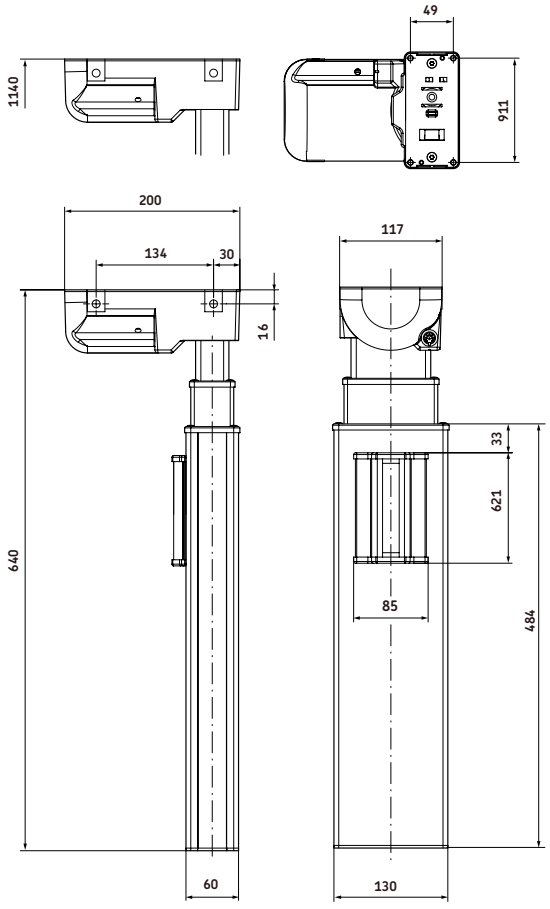

Legend:
S = stroke
L = retracted length

Technical data

	Unit	TMD
Rated push load	N	800
Rated pull load	N	0
Bending load	Nm	up to 120*
Speed (full load to no load)	mm/s	35 to 60
Telescopic pillar version	# of section	3-section
Stroke	mm	700
Retracted length	mm	550
Voltage	V DC	24
Power	W	168
Current	A	7
Duty cycle: intermittent operation	min.	1 min./9 min.
Duty cycle: short-time operation	min.	N/A
Ambient temperature	°C	+5 to +40
Type of protection	IP	20
Protection class	–	SELV
Type of control	–	electrical
Weight	kg	8,5

* For details, please see bending load diagrams

Performance diagrams

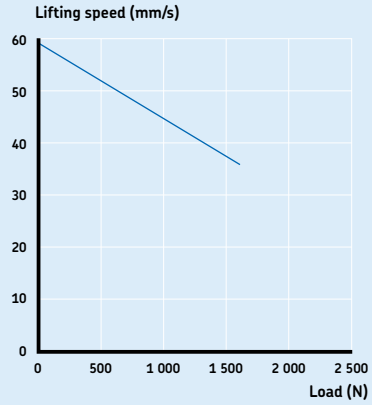

Lifting speed 2-channel control

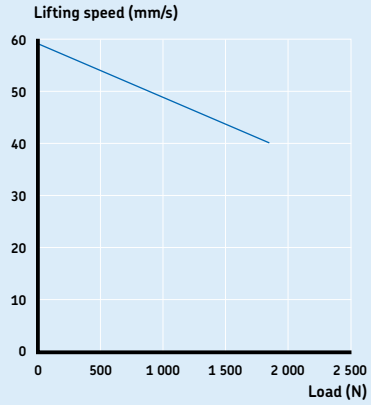

Lifting speed 3-channel control

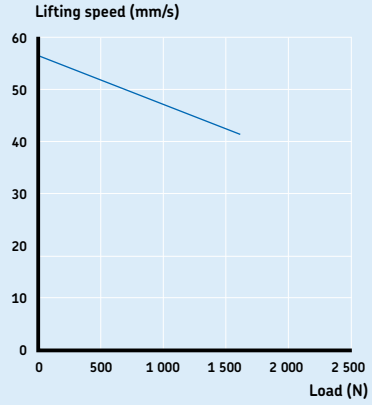

Lifting speed 4-channel control

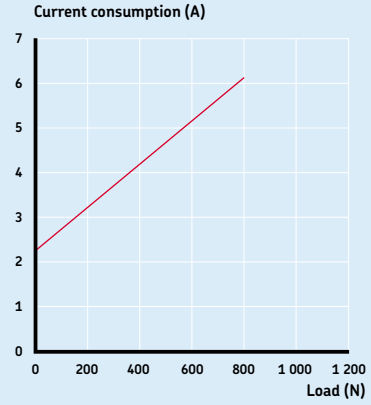

Current-load diagram

Bending load diagrams

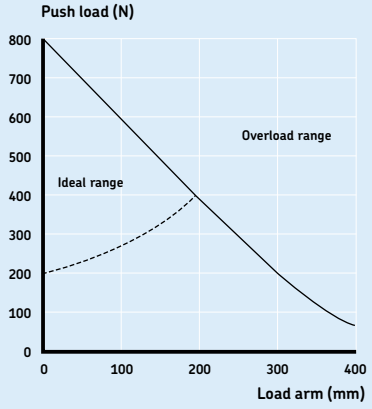

Dynamic stress diagram on X axis
with maximum lift*

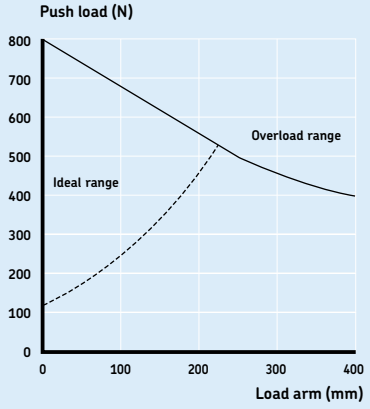

Dynamic stress diagram on Y axis
with maximum lift*

* The values given apply to single lifting pillars. With a stable table structure the ideal field of use can be enlarged.

Ordering key

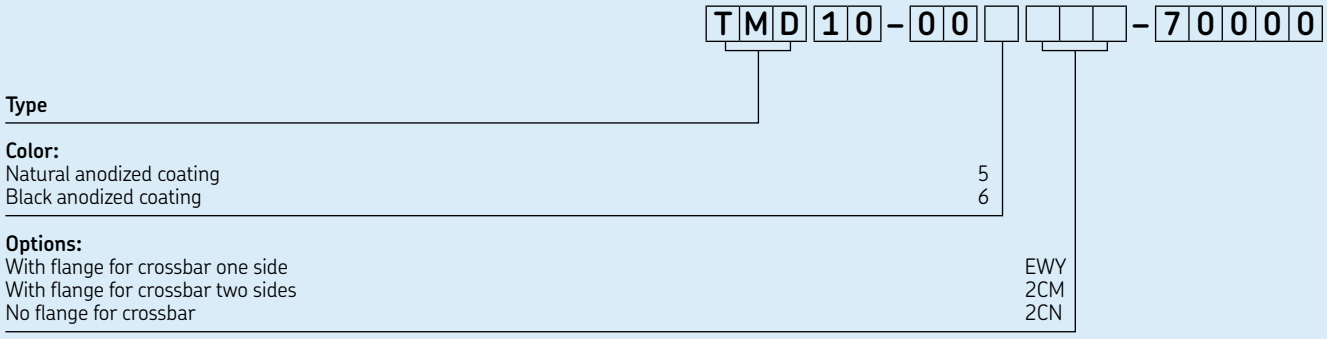

Accessories

	Designation	Order N°
Cable 1,0 m with DIN8–plug	ZKA–306355–1000	M/0121741
Cable 1,5 m with DIN8–plug	ZKA–306355–1500	M/0121726
Cable 2,5 m with DIN8–plug	ZKA–306355–2500	M/0121742

Telescopic pillars – No motor

FRE 98

TMS 102

Telescopic pillar
FRE guiding tube sets

Benefits

- Attractive design
- Stable
- Universal use



2

Dimensional drawings

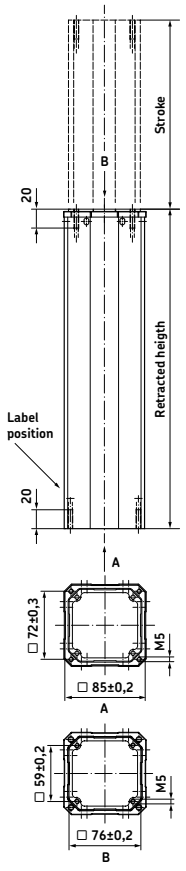

FRE-A085

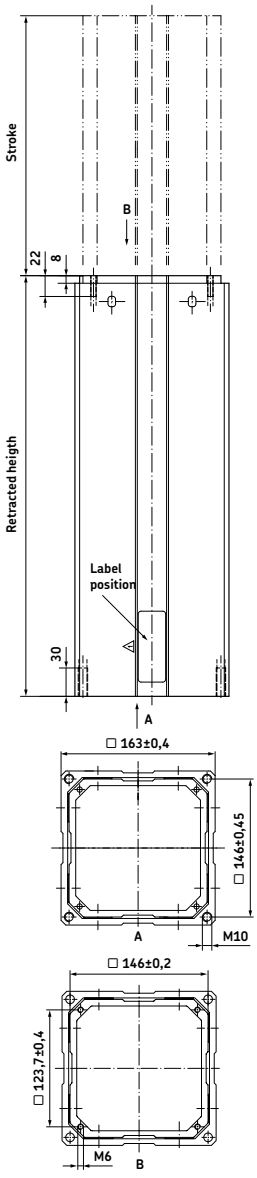

FRE-B163

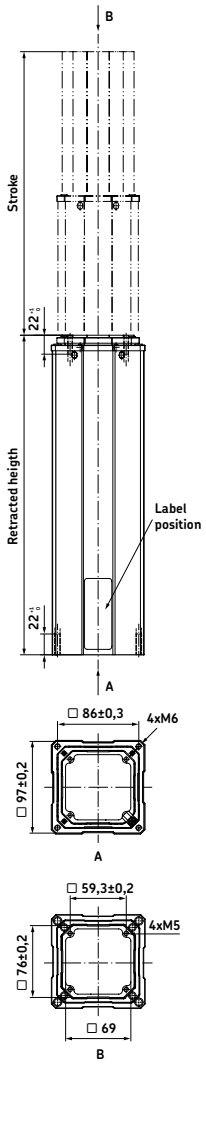

FRE-D097

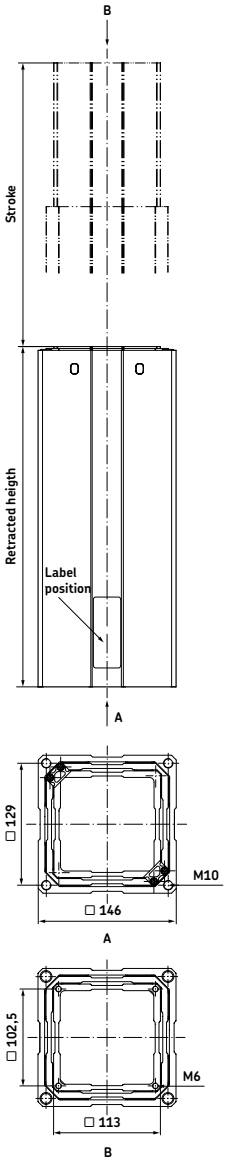

FRE-E146

Type	Sections		Profile dimensions in mm							Retracted length in mm
	2 sections	3 sections	76 × 76	85 × 85	97 × 97	113 × 113	129 × 129	146 × 146	163 × 163	
FRE–A085	×									Stroke + 138
FRE–A113	×									Stroke + 148
FRE–A146	×									Stroke + 168
FRE–D097		×								Stroke + 38
FRE–D129		×								Stroke + 53
FRE–D163		×								Stroke + 53
FRE–B097	×									*N/A*
FRE–B129	×									*N/A*
FRE–B163	×									*N/A*
FRE–E113		×								*N/A*
FRE–E146		×								*N/A*

Options shown in italics are only available on demand. Contact SKF for more information on minimum quantities and additional costs.

Ordering key

FRE – □□□□ – □ □□□ □□ – 000

Type

Combination:

2 sections tube-set /Largest tube size	
85×85 mm	A085
113×113 mm	A113
146×146 mm	A146
97×97 mm	B097
129×129 mm	B129
163×163 mm	B163
3 sections tube-set /Largest tube size	
97×97 mm	D097
129×129 mm	D129
163×163 mm	D163
113×113 mm	E113
146×146 mm	E146
4 sections tube-set (on request)	*V_*
5 sections tube-set (on request)	*F_*
6 sections tube-set (on request)	*S_*
7 sections tube-set (on request)	*Z_*

Color:

Natural anodized	5
Black anodized	6

Option:

No option	000
Cover	MCM
Pull version	MCN
Pull version, with cover	2EA

Stroke:

200 mm	20
300 mm	30
400 mm	40
500 mm	50
600 mm	60
700 mm	70
Other stroke lengths	*XX*

Options shown in italics are only available on demand. Contact SKF for more information on minimum quantities and additional costs.

Telescopic pillar TMS

Benefits

- High bending load

Standards

- EN/IEC 60601–1
- UL 60601–1



Dimensional drawing

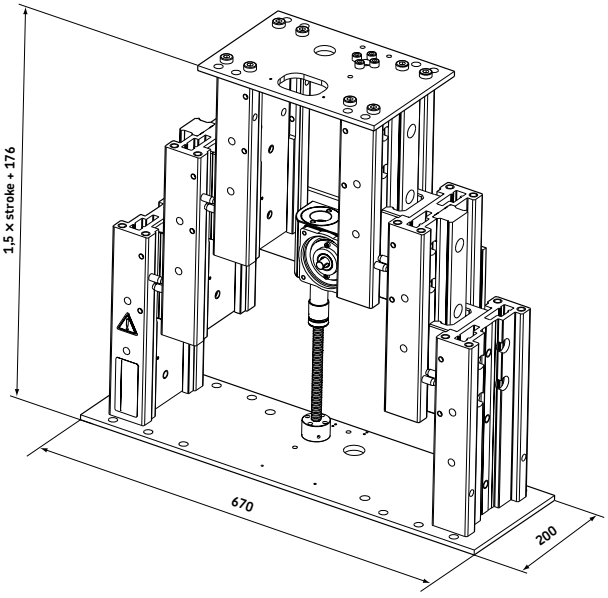

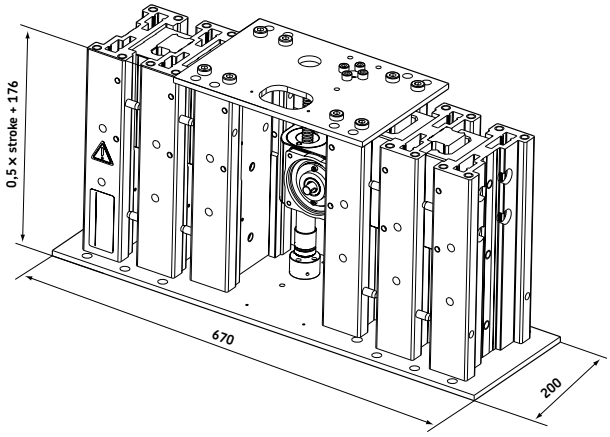

Legend:
S = stroke
L = retracted length

Technical data

	Unit	TMS 00
Rated push load	N	4 000
Rated pull load	N	4 000
Speed	mm/s	N/A
Stroke	mm	250 to 700
Retracted length	mm	S × 0,5 + 176
Duty cycle: intermittent operation	min.	1 min./9 min.
Duty cycle: short-time operation	min.	N/A
Ambient temperature	°C	+10 to +40
Weight	kg	61 to 82

Performance diagrams

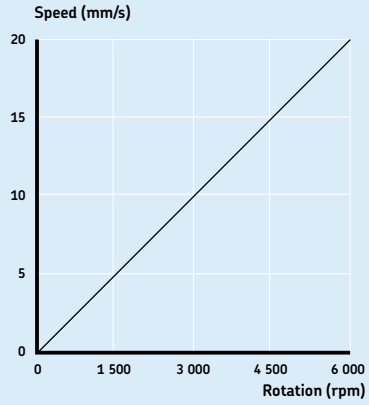

Speed-rotational diagram

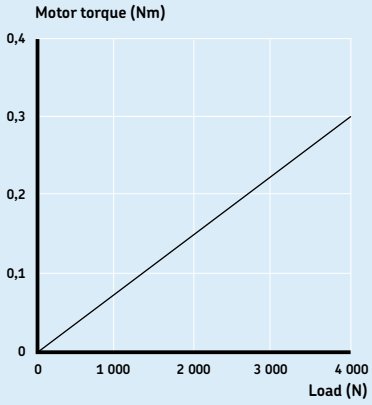

Torque-load diagram

Bending load diagram

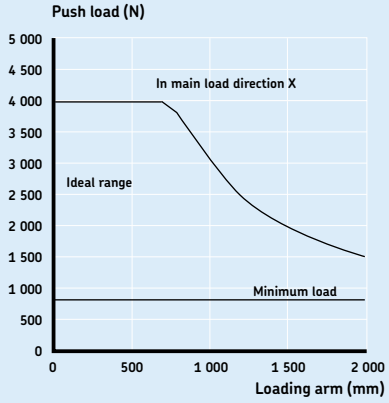

Ordering key

TMS 0 0 – 0 0 0 0 0 0 – _ _ _ 0 0

Type

Stroke (S):

250 mm	*250*
300 mm	300
350 mm	*350*
400 mm	400
450 mm	*450*
500 mm	500
550 mm	*550*
600 mm	600
650 mm	*650*
700 mm	700

Options shown in italics are only available on demand. Contact SKF for more information on minimum quantities and additional costs.



Linear actuators

AC versions

SLS 110
SKS/SKA 114
SKD 118
STD 122
STW 126
MATRIX 6 130
CAR 40 134
CAHB–31 138
SJ 142
DSP 146
CAP 32 150
CAR 32 154
CAT 32B 158
CAT 33 162
WSP 166
CAHB–30 170
CAT 33H 174

DC versions

SKG 180
STG 184
RUNNER 188
MATRIX 3 192
CAR 40 196
ECOMAG 200
FD 204
Magdrive 208
CAHB–21 212
ASM 216
CAP 43B 220
CAT 32B 224
MATRIX 1 228
CAR 32 232
CAP 32 236
CAP 43A 240
CAT 33 244
CAHB–20 248
CARE 33 252
CAR 22 256
CAT 33H 260
CAHB–10 264
CALA 36 268
CAT 21B 272

No motor

CARN 32 280
CCBR 32 284



Linear actuators – AC version

SLS 110

SKS/SKA 114

SKD 118

STD 122

STW 126

MATRIX 6 130

CAR 40 134

CAHB–31 138

SJ 142

DSP 146

CAP 32 150

CAR 32 154

CAT 32B 158

CAT 33 162

WSP 166

CAHB–30 170

CAT 33H 174

Linear actuator Magforce SLS

Benefits

- Modular
- Robust
- Reliable
- High speed and/or high load
- All metal design

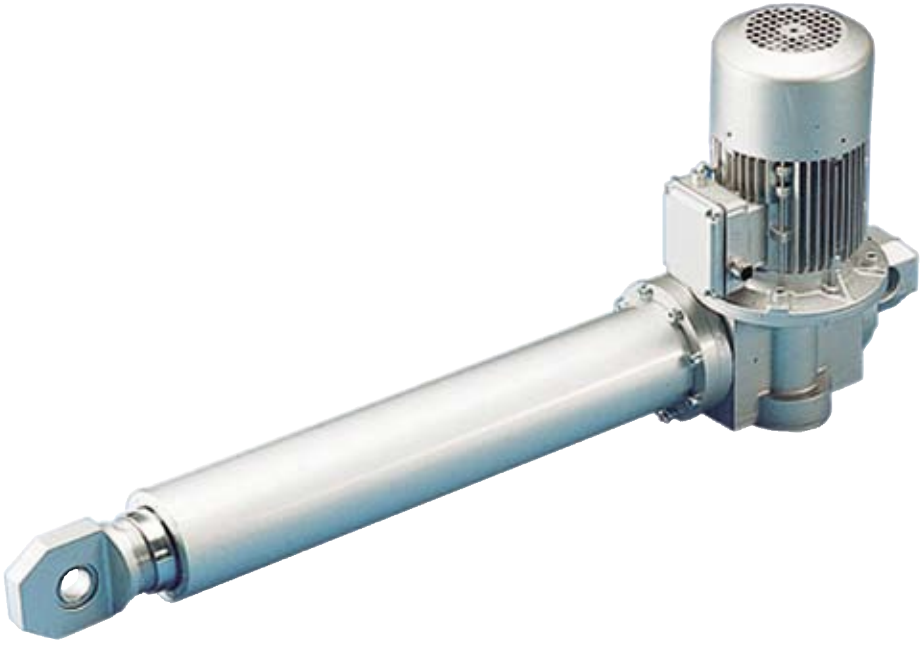

Connecting diagram

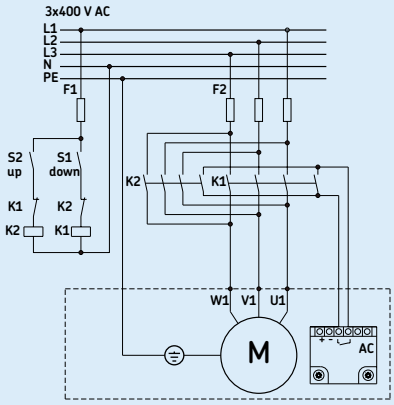

Dimensional drawing

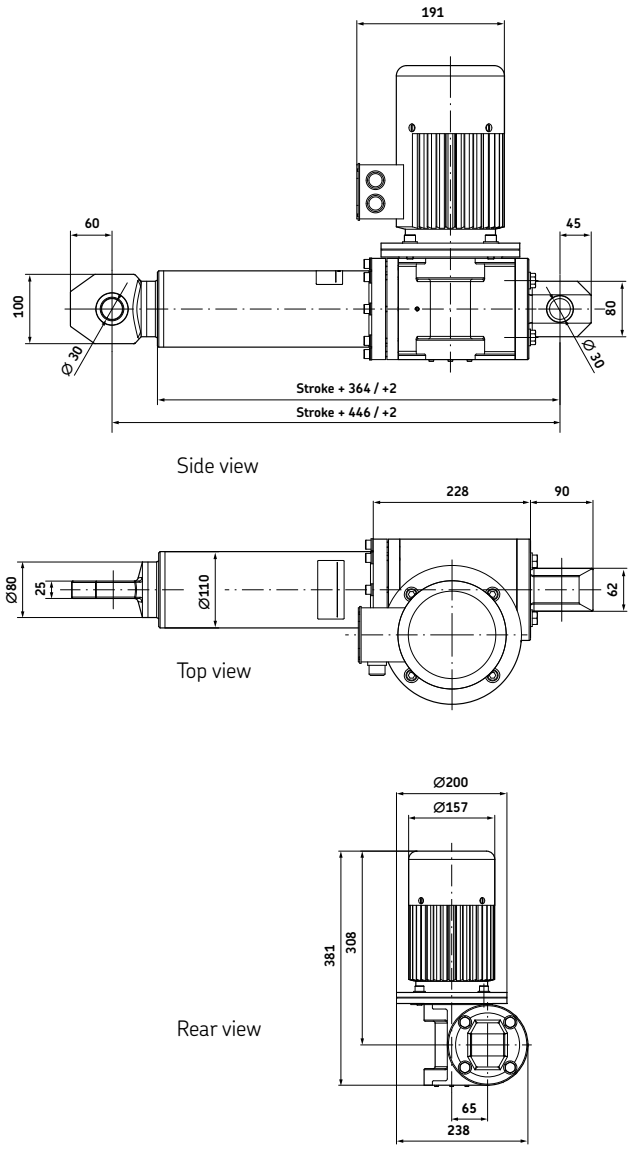

Technical data

	Unit	SLS 18006	SLS 34013	SLS 50020	SLS 50028	SLS 50050
Rated push load	N	18 000	34 000	50 000	50 000	50 000
Rated pull load	N	18 000	34 000	50 000	50 000	50 000
Speed (at full load)	mm/s	74	36	23	16	9
Stroke	mm	100 to 700	100 to 700	100 to 700	100 to 700	100 to 700
Retracted length	mm	S+446	S+446	S+446	S+446	S+446
Voltage	V AC	3×400	3×400	3×400	3×400	3×400
Power consumption	W	3 000	3 000	3 000	2 200	1 900
Current consumption	A	3,9	3,9	3,9	3,5	3,6
Duty cycle	%	10 (1/9)	10 (1/9)	10 (1/9)	10 (1/9)	10 (1/9)
Ambient temperature	°C	–10 to +40	–10 to +40	–10 to +40	–10 to +40	–10 to +40
Type of protection	IP	54	54	54	54	54
Weight	kg	40	40	40	40	40
Color	–	Silver	Silver	Silver	Silver	Silver

Performance diagram

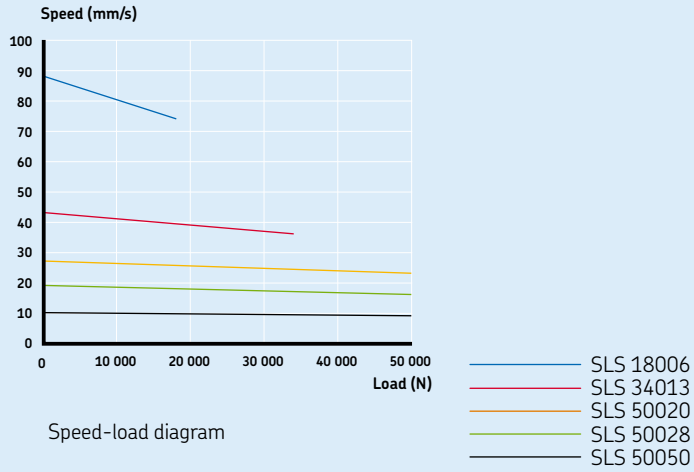

Speed-load diagram

Ordering key

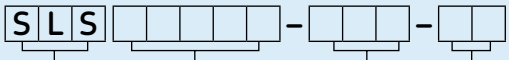

Type

Load:

18 000 N	18006
34 000 N	34013
50 000 N / 23 mm/s	50020
50 000 N / 16 mm/s	50028
50 000 N / 9 mm/s	50050

Stroke (S):

100 mm	100
200 mm	200
300 mm	300
400 mm	400
500 mm	500
600 mm	600
700 mm	700

Customer option:

Standard	01
Others (extended motor shaft, ...)	*XX*

Options shown in italics are only available on demand. Contact SKF for more information on minimum quantities and additional costs.

Linear actuator Magforce SKS/SKA

Benefits

- Modular
- Robust
- Reliable
- High speed and/or high load
- All metal design



Connecting diagram

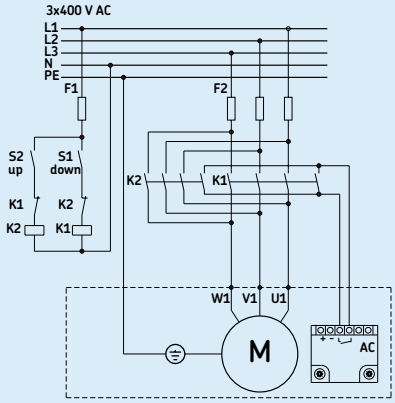

Dimensional drawing

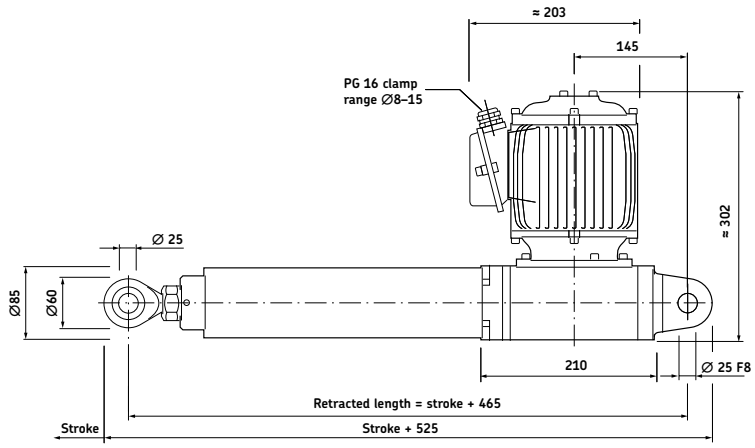

Side view

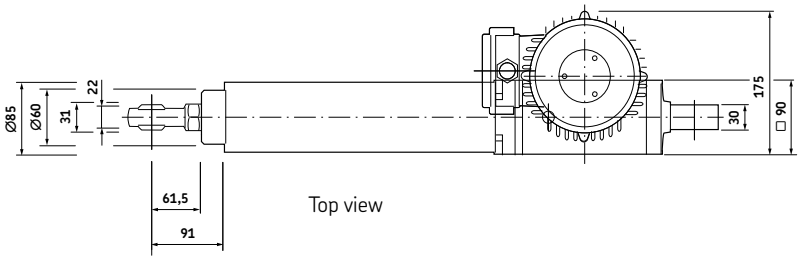

Top view

Technical data

	Unit	SKS/SKA 15404	SKS/SKA 20406	SKS/SKA 25412	SKS/SKA 30423
Rated push load	N	15 000	20 000	25 000	30 000
Rated pull load	N	15 000	20 000	25 000	30 000
Speed (at full load)	mm/s	45	35	17	9
Stroke	mm	100 to 700	100 to 700	100 to 700	100 to 700
Retracted length	mm	S+465	S+465	S+465	S+465
Voltage	V AC	3×400	3×400	3×400	3×400
Power consumption	W	1 700	1 650	1 300	1 200
Current consumption	A	3,3	3,5	2,8	3,0
Duty cycle	%	10 (1/9)	10 (1/9)	10 (1/9)	10 (1/9)
Ambient temperature	°C	–10 to +40	–10 to +40	–10 to +40	–10 to +40
Type of protection	IP	54	54	54	54
Weight (at 200 mm stroke)	kg	30	30	30	30
Color	–	Silver	Silver	Silver	Silver

Performance diagram

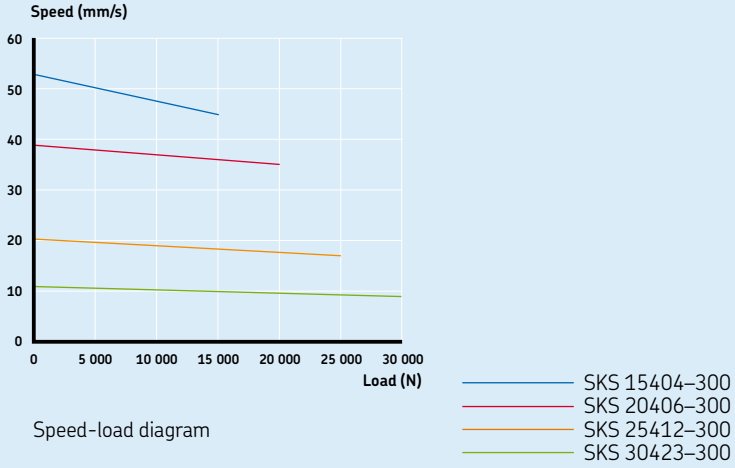

Speed-load diagram

Ordering key

S K S □□□□□ – □□□ – □□

Type

Option:

No option	S

Load:

15 000 N	15404
20 000 N	20406
25 000 N	25412
30 000 N	30423

Stroke (S):

100 mm	100
200 mm	200
300 mm	300
400 mm	400
500 mm	500
600 mm	600
700 mm	700

Customer option:

Standard	01
Others (extended motor shaft, back-up nut, ...)	*XX*

Options shown in italics are only available on demand. Contact SKF for more information on minimum quantities and additional costs.

S K A □□□□□ – □□□ – □□

Type

Option:

With limit switches and/or potentiometer	A

Load:

15 000 N	15404
20 000 N	20406
25 000 N	25412
30 000 N	30423

Stroke (S):

100 mm	100
200 mm	200
300 mm	300
400 mm	400
500 mm	500
600 mm	600
700 mm	700

Customer option:

Standard with limit switch and potentiometer 1k-ohm	01
Standard with limit switch	02
Others (extended motor shaft, back-up nut, ...)	*XX*

Options shown in italics are only available on demand. Contact SKF for more information on minimum quantities and additional costs.

Linear actuator Magforce SKD

Benefits

- Modular
- Robust
- Reliable
- High speed and/or high load
- All metal design



Dimensional drawing

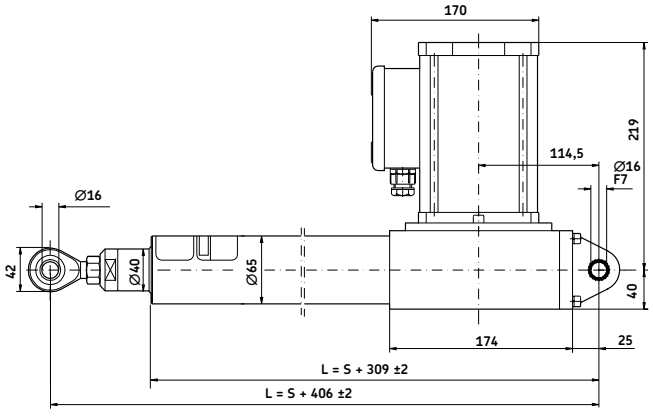

Side view

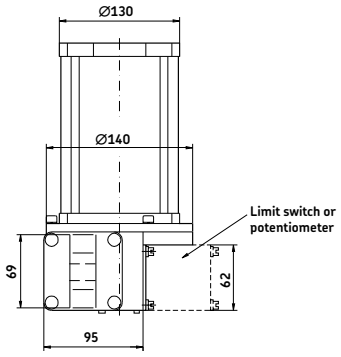

Rear view

Legend:
S = stroke
L = retracted length

Connecting diagrams

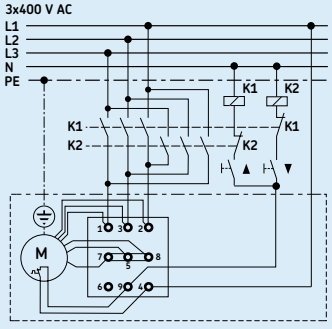

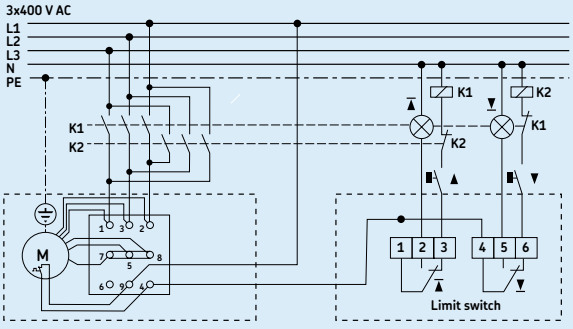

With optional limit switch

Technical data

	Unit	SKD 10007	SKD 12010	SKD 15020	SKD 15040
Rated push load	N	10 000	12 000	15 000	15 000
Rated pull load	N	10 000	12 000	15 000	15 000
Speed (at full load)	mm/s	25	18	11	5
Stroke	mm	100 to 700	100 to 700	100 to 700	100 to 700
Retracted length	mm	S+406	S+406	S+406	S+406
Voltage	V AC	3×400	3×400	3×400	3×400
Power consumption	W	920	800	750	600
Current consumption	A	1,8	1,7	1,6	1,5
Duty cycle	%	25 (2,5/7,25)	10 (1/9)	10 (1/9)	10 (1/9)
Ambient temperature	°C	–10 to +40	–10 to +40	–10 to +40	–10 to +40
Type of protection	IP	54	54	54	54
Weight (at 200 mm stroke)	kg	14,6	14,6	14,6	14,6
Color	–	Silver	Silver	Silver	Silver

Performance diagram

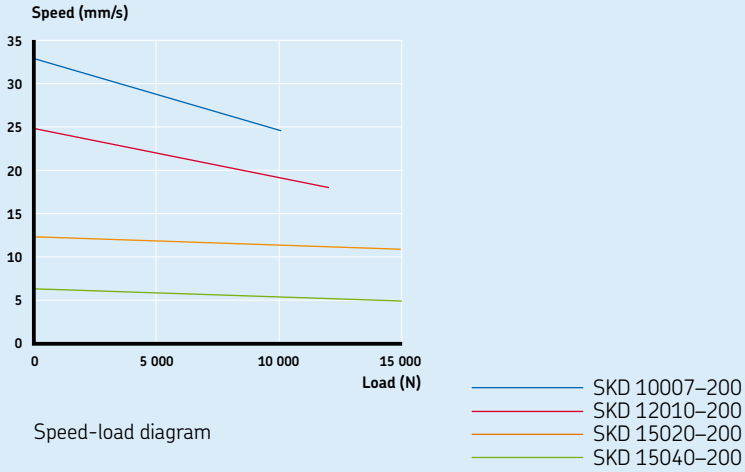

Speed-load diagram

Ordering key

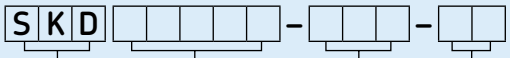

Type

Load:

10 000 N	10007
12 000 N	12010
15 000 N / 11 mm/s	15020
15 000 N / 5 mm/s	15040

Stroke (S):

100 mm	100
200 mm	200
300 mm	300
400 mm	400
500 mm	500
600 mm	600
700 mm	700

Customer option:

Standard	01
Others (brake, limit switch, extended motor shaft, encoder, potentiometer, ...)	*XX*

Options shown in italics are only available on demand. Contact SKF for more information on minimum quantities and additional costs.

Accessories

	Designation	Order N°
Magnetic brake (1,4 Nm)	ZAC–1031,0219	M/0126957
Potentiometer (1 000 Ω)	ZAC–1063,0011	M/0126958
Encoder	ZAC–1063,0020	M/0126959

Linear actuator Magforce STD

Benefits

- Modular
- Robust
- Reliable
- High speed and/or high load
- All metal design



Dimensional drawing

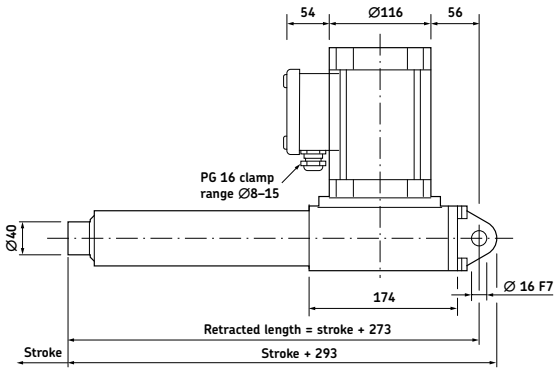

Side view

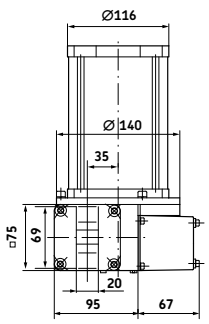

Rear view

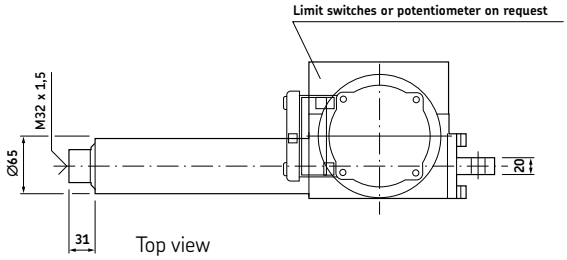

Top view

Connecting diagrams

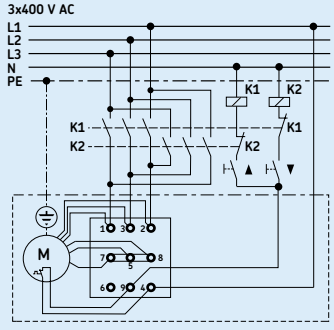

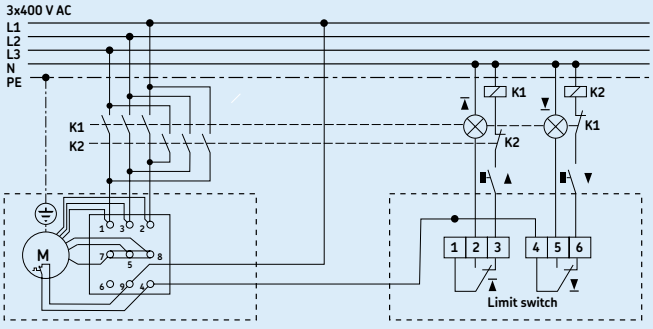

With optional limit switch

Technical data

	Unit	STD 10007	STD 12010	STD 15020	STD 15040
Rated push load	N	10 000	12 000	15 000	15 000
Rated pull load	N	10 000	12 000	15 000	15 000
Speed (at full load)	mm/s	10	7	4	2
Stroke	mm	100 to 700	100 to 700	100 to 700	100 to 700
Retracted length	mm	S+273	S+273	S+273	S+273
Voltage	V AC	3×400	3×400	3×400	3×400
Power consumption	W	920	800	700	500
Current consumption	A	1,8	1,7	1,6	1,4
Duty cycle	%	25 (2,5/7,5)	10 (1/9)	10 (1/9)	10 (1/9)
Ambient temperature	°C	–10 to +40	–10 to +40	–10 to +40	–10 to +40
Type of protection	IP	54	54	54	54
Weight (at 200 mm stroke)	kg	14,6	14,6	14,6	14,6
Color	–	Silver	Silver	Silver	Silver

Performance diagram

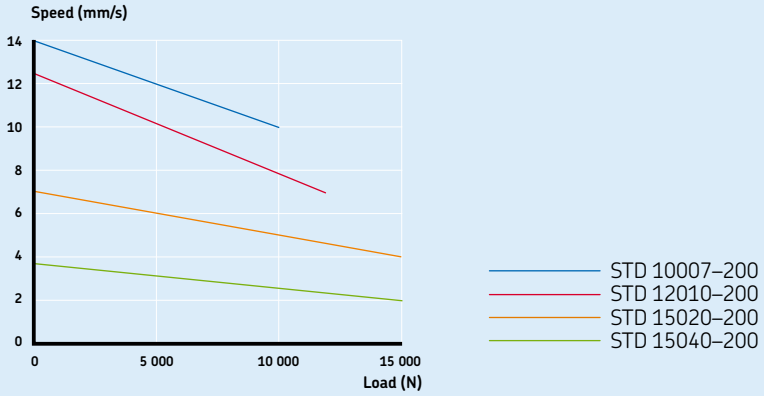

Speed-load diagram

Safety load factor conditions

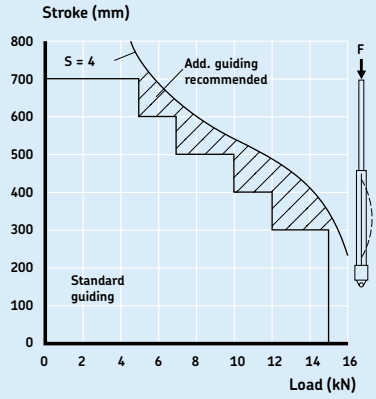

Bending of spindle
S = safety factor Euler 3

Options

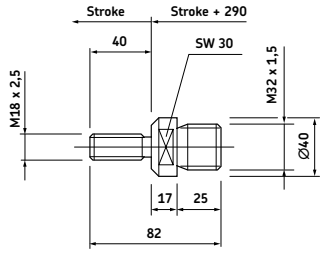

Adapter

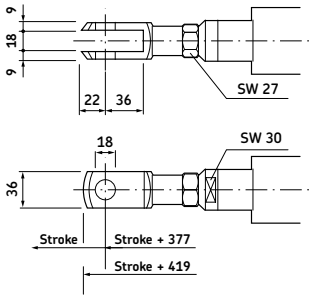

Fork head

Ordering key

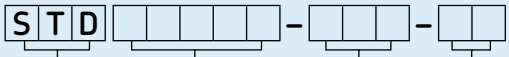

Type

Load:

10 000 N	10007
12 000 N	12010
15 000 N / 4 mm/s	15020
15 000 N / 2 mm/s	15040

Stroke (S):

100 mm	100
200 mm	200
300 mm	300
400 mm	400
500 mm	500
600 mm	600
700 mm	700

Customer option:

Standard	01
Extended shaft	*11*
Back-up nut on push	*13*
Low temperature grease	*19*
Back-up nut on push and pull	*34*
Others (brake, limit switch, extended motor shaft, encoder, potentiometer, ...)	*XX*

Options shown in italics are only available on demand. Contact SKF for more information on minimum quantities and additional costs.

Accessories

	Designation	Order N°
Adapter bolt	ZBE–1031,0106	M/0125265
Fork head	ZBE–1051,9038	M/0124705

Linear actuator Magforce STW

Benefits

- Modular
- Robust
- Reliable
- High speed and/or high load
- All metal design

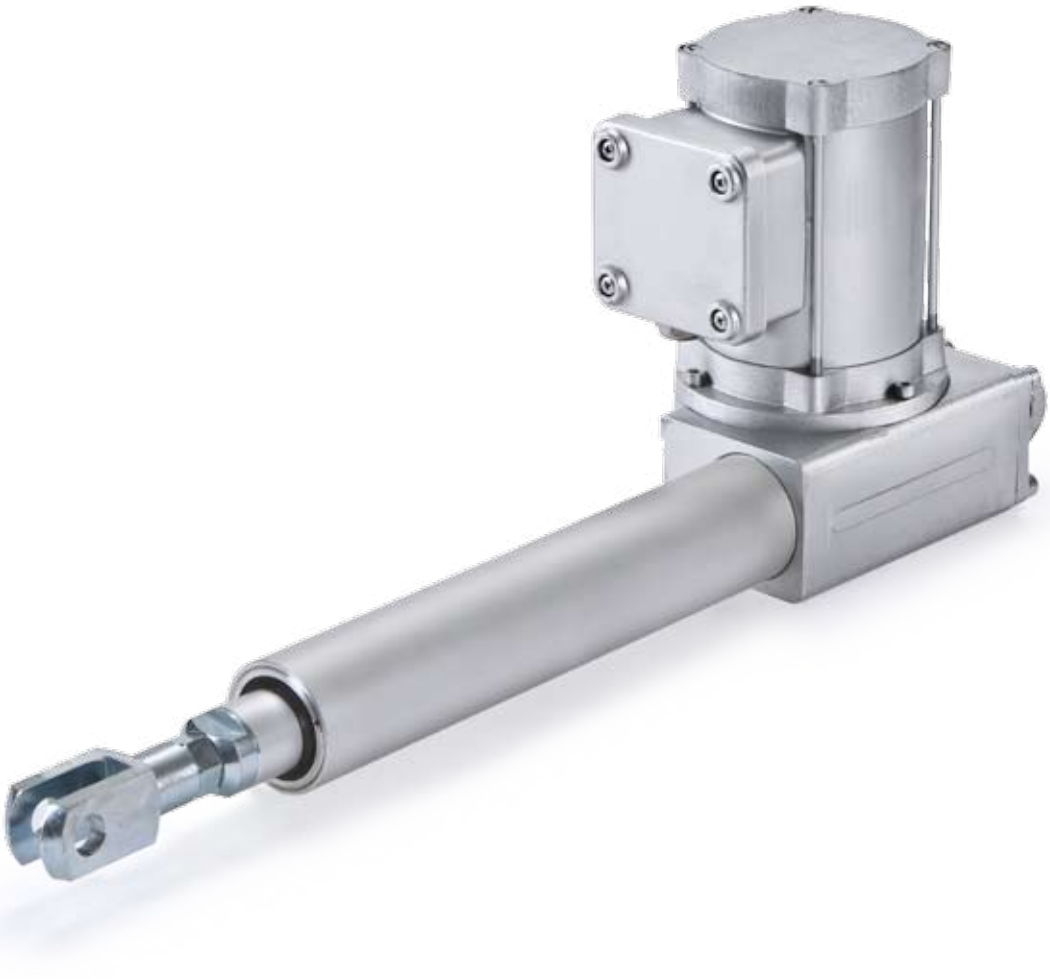

Dimensional drawing

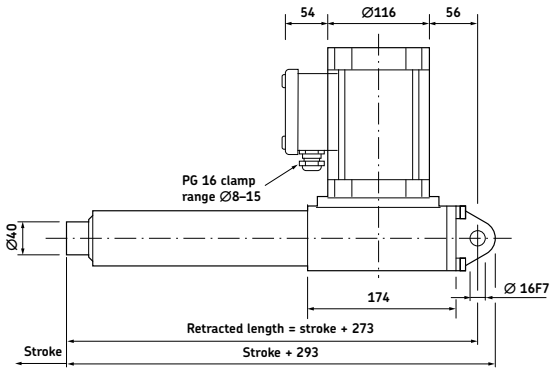

Side view

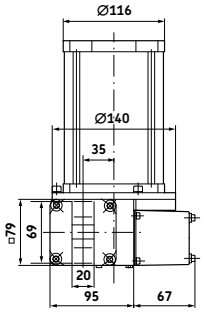

Rear view

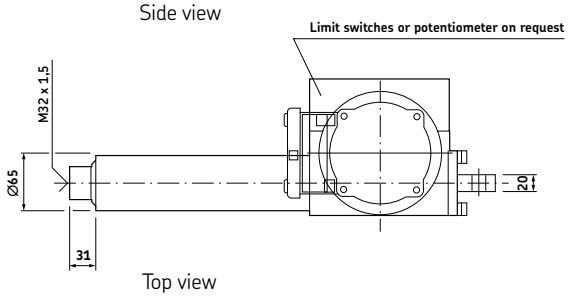

Top view

Connecting diagrams

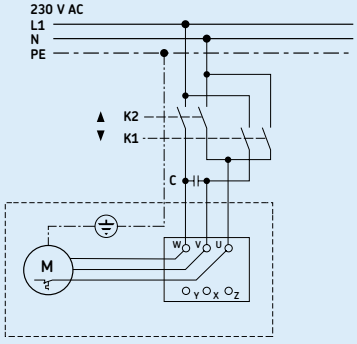

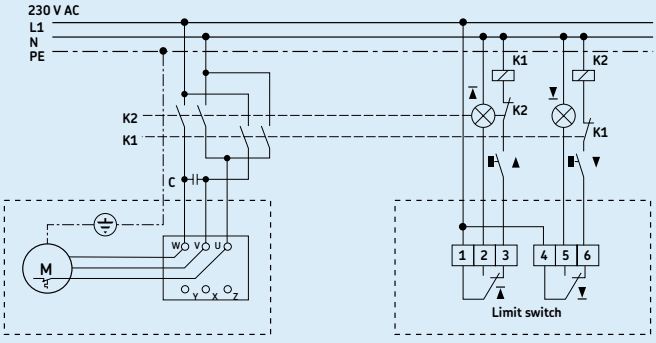

With optional limit switch

Technical data

	Unit	STW 5007	STW 7010	STW 10020	STW 15040
Rated push load	N	5 000	7 000	10 000	15 000
Rated pull load	N	5 000	7 000	10 000	15 000
Speed (at full load)	mm/s	12	8	4	2
Stroke	mm	100 to 700	100 to 700	100 to 700	100 to 700
Retracted length	mm	S+273	S+273	S+273	S+273
Voltage	V AC	230	230	230	230
Power consumption	W	700	710	710	750
Current consumption	A	3,3	3,5	3,5	3,5
Duty cycle	%	15 (1,5/8,5)	10 (1/9)	10 (1/9)	10 (1/9)
Ambient temperature	°C	–10 to +40	–10 to +40	–10 to +40	–10 to +40
Type of protection	IP	54	54	54	54
Weight (at 200 mm stroke)	kg	14,6	14,6	14,6	14,6
Color	–	Silver	Silver	Silver	Silver

Performance diagram

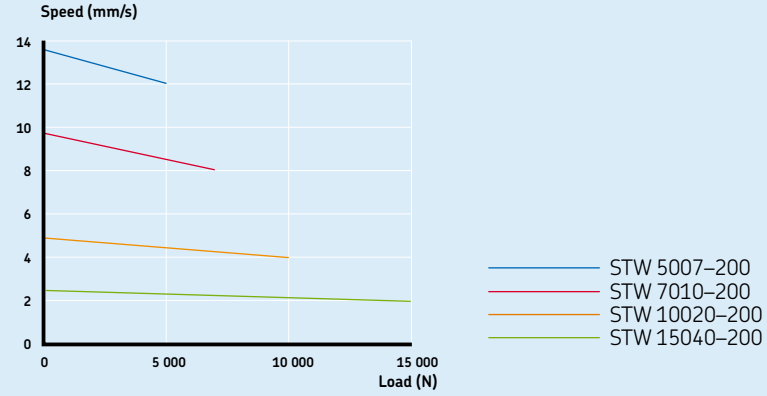

Speed-load diagram

Safety load factor conditions

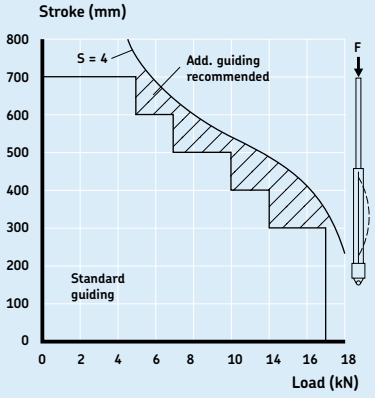

Bending of spindle S = safety factor Euler 3

Options

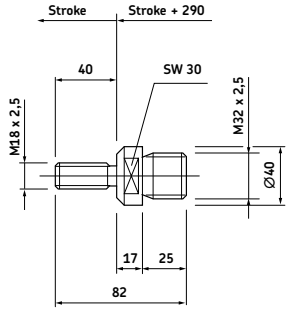

Adapter

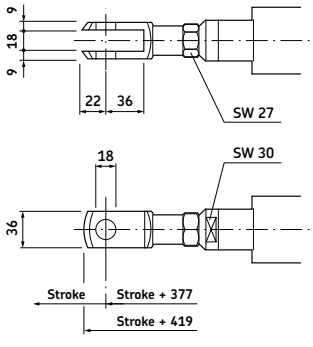

Fork head

Ordering key

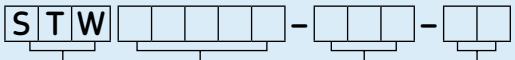

Type

Load:

5 000 N	05007
7 000 N	07010
10 000 N	10020
15 000 N	15040

Stroke (S):

100 mm	100
200 mm	200
300 mm	300
400 mm	400
500 mm	500
600 mm	600
700 mm	700

Customer option:

Standard	01
Limit switch	*05*
Low temperature grease	*08*
Others (brake, limit switch, extended motor shaft, encoder, potentiometer, ...)	*XX*

Options shown in italics are only available on demand. Contact SKF for more information on minimum quantities and additional costs.

Accessories

	Designation	Order N°
Adapter bolt	ZBE–1031,0106	M/0125265
Fork head	ZBE–1051,9038	M/0124705

Linear actuator Matrix 6

Benefits

- Silent operation
- Full system with integrated control unit and accessories
- Compact and aesthetic
- Back-up nut as standard



Suitable control units and accessories

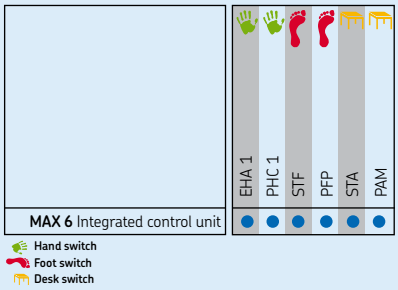

Connecting diagram

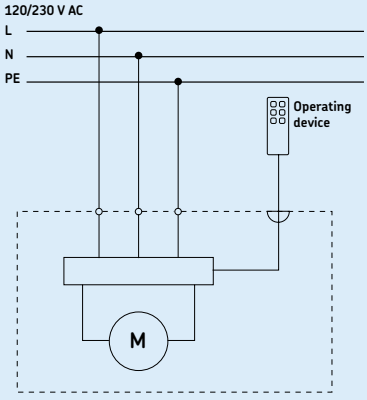

Dimensional drawing

Side view

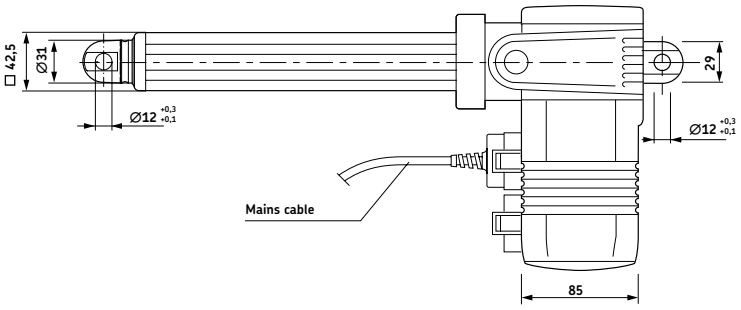

Top view

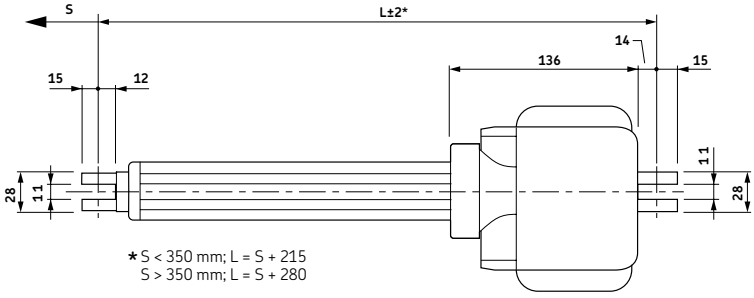

* S < 350 mm; L = S + 215
S > 350 mm; L = S + 280

Rear attachment position
Standard 0°

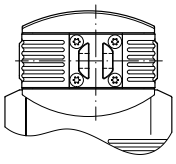

Turned 90°

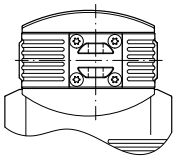

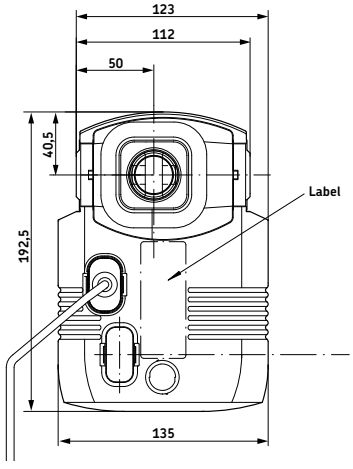

Technical data

		Unit	MAX 6..A..	MAX 6..B..	MAX 6..C..
Rated push load		N	8 000	4 000	3 000
Rated pull load		N	6 000[1]	4 000	3 000
Speed (full load to no load)		mm/s	6 to 7,5	8 to 10	13 to 18
Stroke		mm	50 to 700	50 to 700	50 to 700
Retracted length		mm	S + 215/280[2]	S + 215/280[2]	S + 215/280[2]
Voltage		V AC	120 or 230	120 or 230	120 or 230
Power consumption	120 V AC	W	150	150	150
	230 V AC	W	145	145	145
Current consumption	120 V AC	A	1,8	1,8	1,8
	230 V AC	A	0,9	0,9	0,9
Duty cycle		%	10 (1/9)	10 (1/9)	10 (1/9)
Ambient temperature		°C	0 to +40	0 to +40	0 to +40
Type of protection		IP	66S	66S	66S
Weight (at 200 mm stroke)		kg	4,8	4,5	4,2
Color		–	Grey	Grey	Grey

[1] Max load for medical application is 5 000 N
[2] S < 350 mm; L = S + 215
S > 350 mm; L = S + 280

Performance diagrams

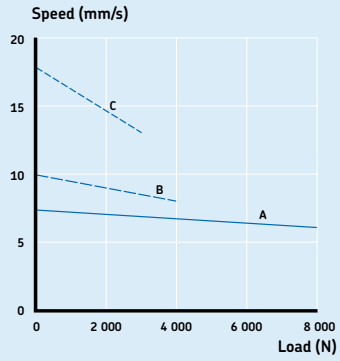

Speed-load diagram

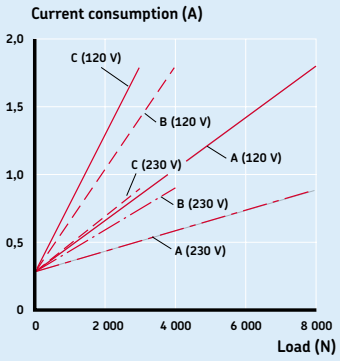

Current-load diagram

Safety factor load conditions

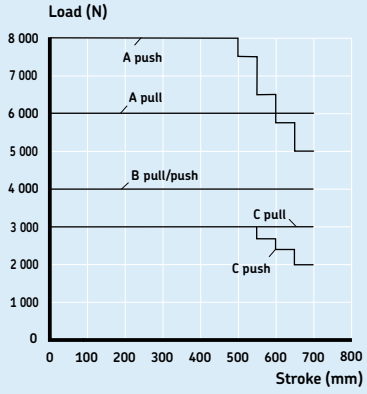

Push load reduction static
Safety factor S=1

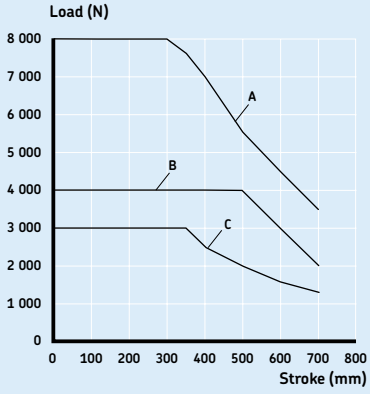

Push load reduction static
Safety factor S=2

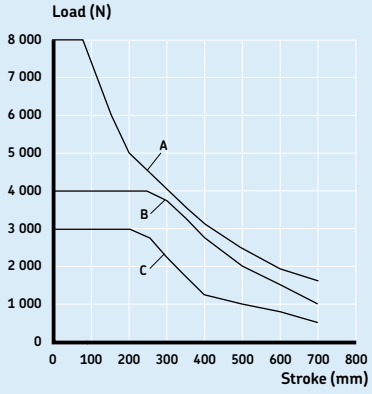

Push load reduction static
Safety factor S=4 (EN60601)

Accessories

	Plug	Country	Designation	Order number
Straight cable 3,5 m	Schuko	DE	ZKA–140306–3500	M/0121723
Straight cable 3,5 m	SEV	CH	ZKA–140316–3500	M/0121737
Straight cable 3,5 m	UL	USA	ZKA–140355–3500	M/0121724
Straight cable 3,5 m	Hospital grade	USA	ZKA–140360–3500	M/0121732
Straight cable 3,5 m	British standard	UK	ZKA–140350–3500	M/0121743
Coiled cable 1,2 m / 2,2 m	Schuko	DE	ZKA–140342–1500	M/0121728
Coiled cable 1,2 m / 2,2 m	SEV	CH	ZKA–140378–1200	M/0121738
Straight polyurethane cable 3,5 m	SEV	CH	ZKA–140422–3500	M/0121739
Straight polyurethane cable 3,5 m	Schuko	DE	ZKA–140426–3500	M/0121740
Strain relief for mains cable			ZUB–952253	M/0102848
Tool for plugs (Jack/D–Sub/Mains)			ZWS–140375	M/0125322

Ordering key

MAX6 ☐ – ☐ ☐ ☐ A ☐ ☐ ☐ ☐ ☐ 000

Type

Voltage:

230 V AC/50 Hz, integrated pneumatic control	0
120 V AC/60 Hz, integrated pneumatic control	1
230 V AC/50 Hz, integrated low voltage control with additional 24 V output	2
120 V AC/60 Hz, control +1 channel with additional 24 V output	3
230 V AC/50 Hz, integrated low voltage	4
120 V AC/60 Hz, integrated low voltage	5

Load:

8 000 N	A
4 000 N	B
3 000 N	C

Stroke (S):

50 mm	050 265
100 mm	100 315
150 mm	150 365
200 mm	200 415
250 mm	250 465
300 mm	300 515
350 mm	350 565
400 mm	400 680
450 mm	450 730
500 mm	500 780
550 mm	550 830
600 mm	600 880
650 mm	650 930
700 mm	700 980
Other stroke lengths; 50<S<700 mm	--- ---

Cable/Connecting plug:

No cable	0

Orientation of rear attachment:

No fork head (customized option)	0
Standard (as drawing)	1
Turned 90°	*2*

Option 1:

No option, only valid for actuator "A"	0
Quick-release +EKZm, push, fork head bore parallel to button (for actuator design "C" is L= +115 mm)*	E
*Quick-release +EKZm, push, fork head bore 90° to button (for actuator design "C" is L= +115 mm)**	*F*
Electrical anti-pinching protection, motor direction pull	*K*
Electrical anti-pinching protection, motor direction push	*L*
Push load, for actuator version "B" and "C"	M
Pull load, for actuator version "B" and "C"	N

EKZm: mechanical anti-pinching *min. stroke 150 mm up to 300 mm

Option 2:

No option	0
Lifetime monitoring	*M*

Option 3:

No option	–
Emergency lowering, fork head bore parallel to clamping lever (for actuator design "A", L+30 mm)	V
Emergency lowering, fork head bore 90° to clamping lever (for actuator design "A", L+30 mm)	*W*

Options shown in italics are only available on demand. Contact SKF for more information on minimum quantities and additional costs.

Linear actuator CAR 40

Benefits

- Industrial reliable and robust actuator
- Wide range of components
- Right- and left-hand version



Suitable control units and accessories

	Control unit	Limit switch
	CAEV 110/220	CAXB 40*
E110D		●
E110DB		●
E220D	●	●
E220DB	●	●
CAES 31C	●	

Hand switch
Foot switch
Desk switch

* See page 379

Connecting diagram

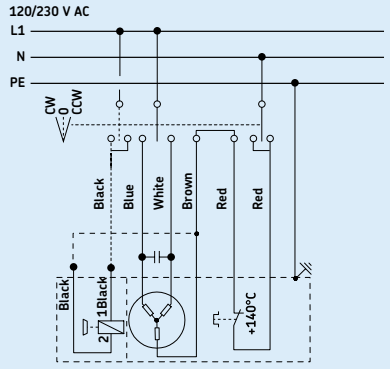

Dimensional drawing

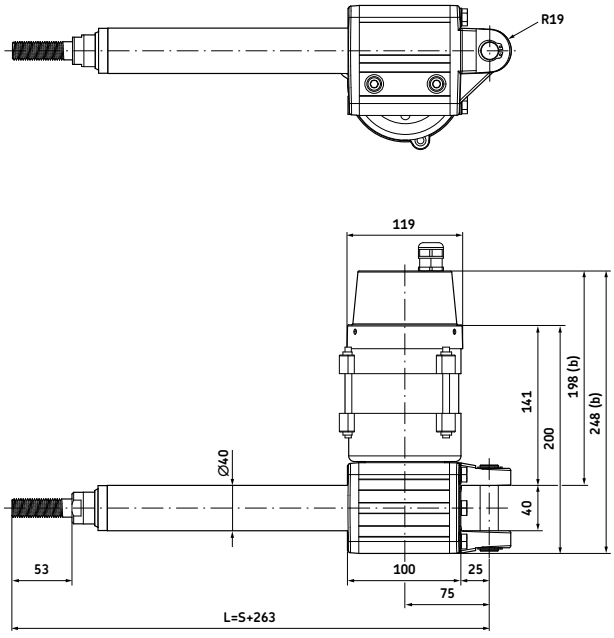

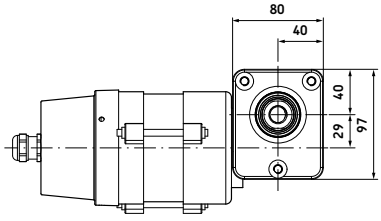

Legend:
S = stroke
L = retracted length
(b) = cover for brake (D24CB)

Technical data

		Unit	CAR 40
Rated push load		N	2 000 to 6 000
Rated pull load		N	2 000 to 6 000
Speed (at full load)		mm/s	9 to 40*
Stroke		mm	100 to 700
Retracted length		mm	S+263
Voltage		V AC	120 or 230
Power consumption	120 V AC	W	360
	230 V AC	W	299
Current consumption	120 V AC	A	3 (brake +0,29 A)
	230 V AC	A	1,3 (brake +0,11 A)
Duty cycle		%	40
Ambient temperature		°C	–20 to +70
Type of protection		IP	20/54
Weight		kg	5,8 to 8,4

* Depending on selected motor

Performance diagrams

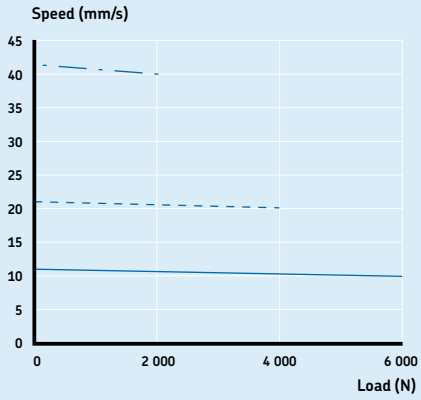

Speed-load diagram CAR 40 ... 120 V AC

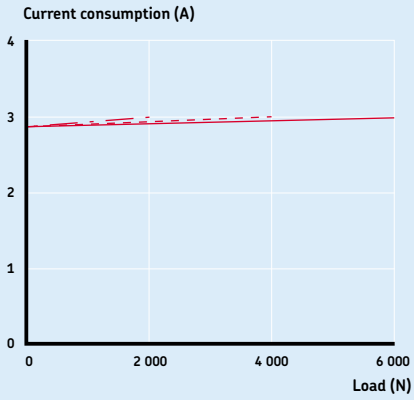

Current-load diagram CAR 40 ... 120 V AC

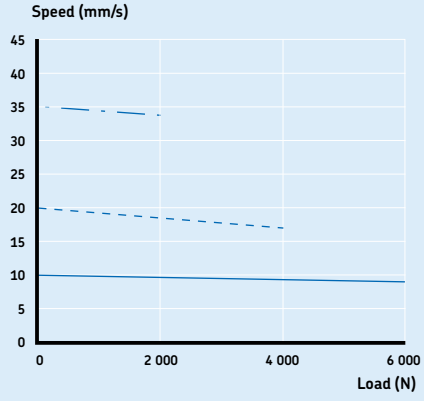

Speed-load diagram CAR 40 ... 230 V AC

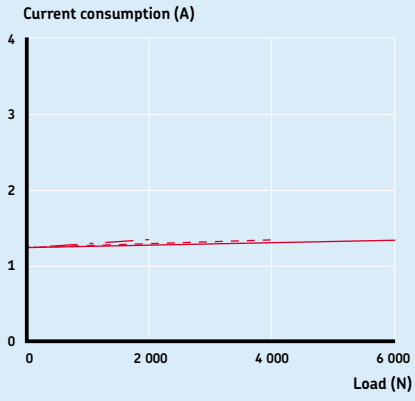

Current-load diagram CAR 40 ... 230 V AC

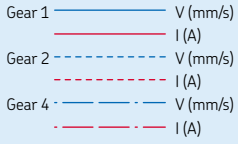

Duty cycle

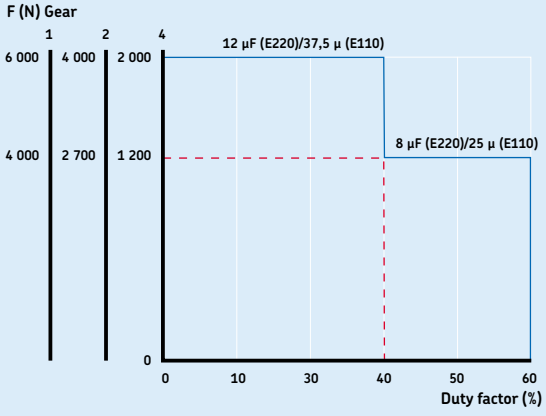

CAR 40 ... 120/230 V AC

Ordering key

Dynamic load (N) / Speed (mm/s)			Motor options	
6 000/xx	4 000/xx	2 000/xx	No motor	0000
6 000/10	4 000/20	2 000/40	120 V AC/60 Hz, 1-phase, IP54	E110D
6 000/10	4 000/20	2 000/40	120 V AC/60 Hz, 1-phase, brake, IP20	E110DB
6 000/9	4 000/17	2 000/34	230 V AC/50 Hz, 1-phase, IP54	E220D
6 000/9	4 000/17	2 000/34	230 V AC/50 Hz, 1-phase, brake, IP20	E220DB
1	**2**	**4**		

CAR □ 40X □□□ X □□ / □□□□□□

Type

Motor assembly:

Right	R
Left	L

Stroke (S):

100 mm	100
300 mm	300
500 mm	500
700 mm	700
Other stroke lengths	---

Option:

Friction clutch	F
Back-up nut	S

Options shown in italics are only available on demand. Contact SKF for more information on minimum quantities and additional costs.

Linear actuator CAHB–31 series

Benefits

- High efficiency ball screw
- Extension tube (stainless steel)
- Protection tube (steel)
- Enhanced corrosion resistance
- Mechanical overload protection (clutch)
- Lubricated for service life
- Robust, designed for tough environment
- No back driving
- Motor with thermal protection



Connecting diagram

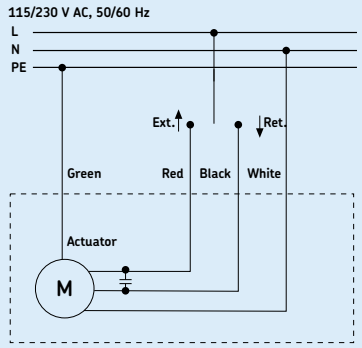

Different rear attachment

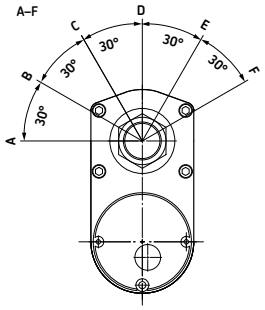

Dimensional drawing

Basic Configuration (dashed line for optional limit switch)

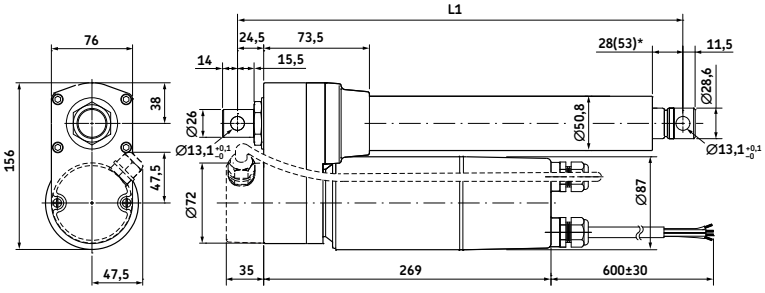

Legend:
L1 = retracted length
* 53 = dimension with limit switch

	With limit switch[1]						Without limit switch[2]					
Stroke (mm)	**102**	**153**	**204**	**305**	**457**	**610**	**102**	**153**	**204**	**305**	**457**	**610**
L1 Retracted length	444	444	495	659	811	964	380	419	419	521	735	888

[1] Tolerance: S and L1 = ± 5,0 mm (If S≥305 mm, S = ± 7,5 mm)

[2] Tolerance: S = ± 2,5 mm and L1 = ± 3,8 mm

Technical data

		Unit	CAHB–31... 1	CAHB–31... 2	CAHB–31... 3
Rated push load		N	2 300	4 500	6 000
Rated pull load		N	2 300	4 500	6 000
Speed (full load to no load)	115 VAC/60 Hz	mm/s	48 to 57	22 to 28	13 to 15
	230 VAC/50 Hz	mm/s	40 to 50	20 to 24	11 to 13
Stroke		mm	102 to 610	102 to 610	102 to 610
Retracted length		mm	–*	–*	–*
Voltage		V AC	115 or 230	115 or 230	115 or 230
Power consumption		W	N/A	N/A	N/A
Current consumption	115 V AC/60 Hz	A	3	2,6	2,2
	230 V AC/50 Hz	A	1,5	1,4	1,4
Duty cycle		%	25	25	25
Ambient temperature		°C	–26 to +65	–26 to +65	–26 to +65
Type of protection		IP	65	65	65
Weight (at 305 mm stroke)		kg	9,5	9,5	9,5
Color		–	Black	Black	Black

* See above table
For outdoors application, please contact SKF.

Performance diagrams

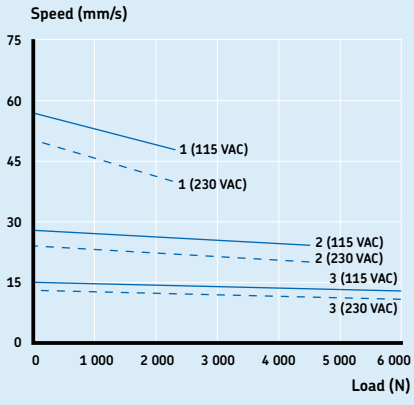

Speed-load diagram

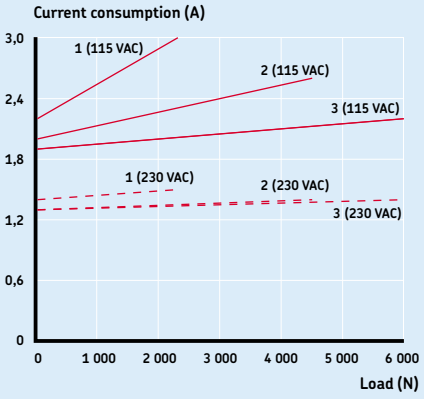

Current-load diagram

Dimensional drawing

Optional potentiometer (dashed line for optional limit switch)

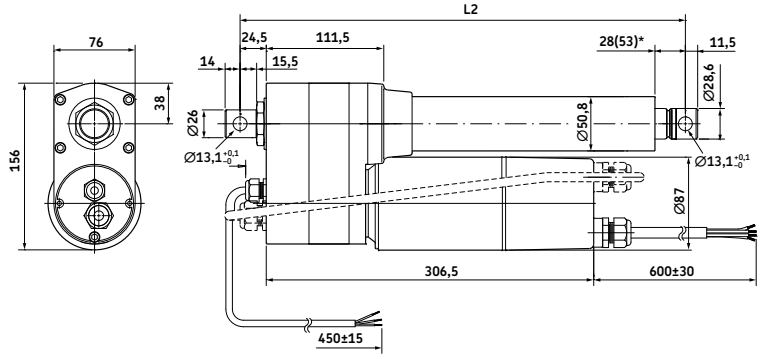

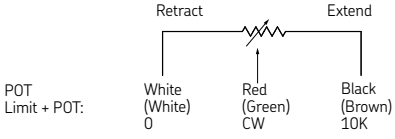

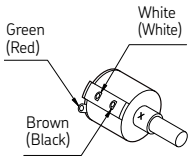

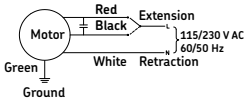

Legend:
L2 = retracted length
* 53 = dimension with limit switch

	With limit switch[1]						Without limit switch[2]					
Stroke (mm)	**102**	**153**	**204**	**305**	**457**	**610**	**102**	**153**	**204**	**305**	**457**	**610**
L2 Retracted length	482	482	533	697	849	1 002	418	457	457	559	773	926

[1] Tolerance: S and L2 = ± 5,0 mm (If S≥305 mm, S = ± 7,5 mm)

[2] Tolerance: S = ± 2,5 mm and L2 = ± 3,8 mm

Potentiometer resolution

Stroke (mm)	**102**	**153**	**204**	**305**	**457**	**610**
Ohm/mm	59,0	59,0	29,5	29,5	9,84	9,84

Ordering key

CAHB–31–□□N–□□□□□□–A□□□□0–000

Type

Voltage:

115 V AC	N
230 V AC	P

Load:

2 300 N	1
4 500 N	2
6 000 N	3

Screw:

Ball screw	N

Stroke:

102 mm	102
153 mm	153
204 mm	204
305 mm	305
457 mm	457
610 mm	610

Retracted length:

Stroke		
with L.S.[1]	w/o POT[2]	with POT[2]
102 mm	444 mm	482 mm
153 mm	444 mm	482 mm
204 mm	495 mm	533 mm
305 mm	659 mm	697 mm
457 mm	811 mm	849 mm
610 mm	964 mm	A02 mm (1 002 mm)
w/o L.S.[1]		
102 mm	380 mm	418 mm
153 mm	419 mm	457 mm
204 mm	419 mm	457 mm
305 mm	521 mm	559 mm
457 mm	735 mm	773 mm
610 mm	888 mm	926 mm

IP:

Standard (IP 65)	A

Front attachment:

Standard (hole: ∅ 13,1 mm)	A
Customized	*X*

Rear attachment:

Standard (0° and hole: ∅ 13,1 mm)	A
30°	B
60°	C
90°	D
120°	E
150°	F
Customized	*X*

Option 1:

None	0
Limit switch (only for load version 6 000 N)	L

Option 2:

None	0
Potentiometer	P

Options shown in italics are only available on demand. Contact SKF for more information on minimum quantities and additional costs.

[1] L.S.= Limit Switch
[2] POT= Potentiometer

Linear actuator
SJ 25, 35, 45 series

Benefits

- Motor with thermal protection (+120± 5°C)
- Acme screw
- Self-locking
- Integrated limit switches
- Potentiometer for feedback
- Gear box (metal)
- UL 1004/UL 60601–1* certification



*Only as an option for SJ35 and SJ45

Connecting diagram

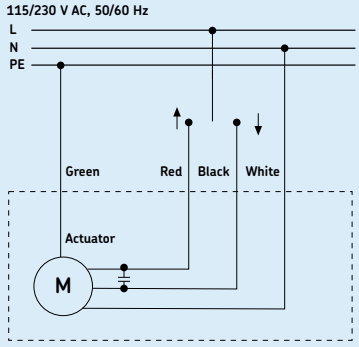

Dimensional drawing

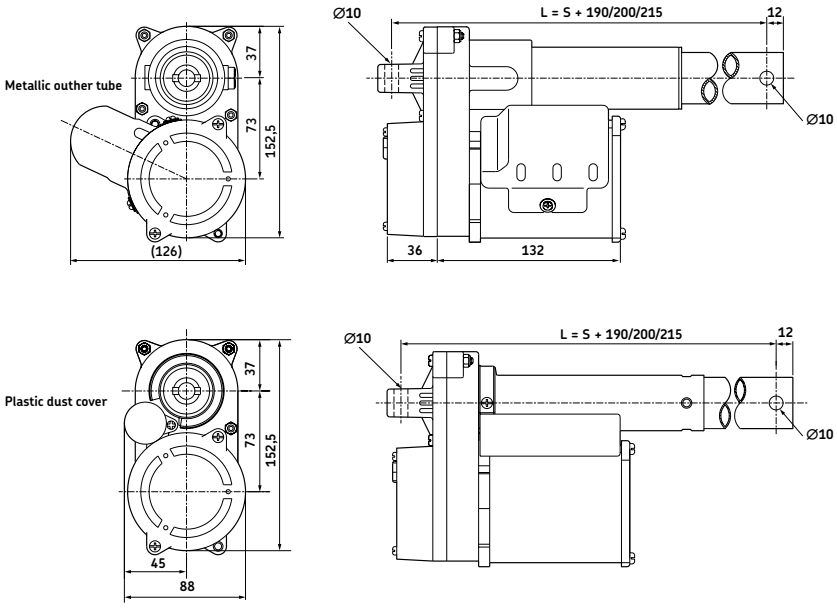

Legend:
S = stroke
L = retracted length

Mountings

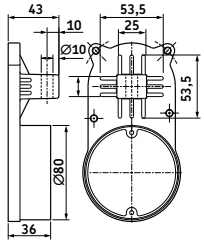

01

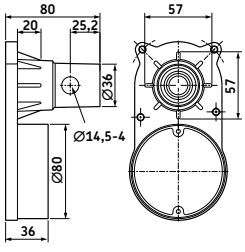

02

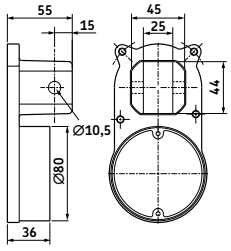

03

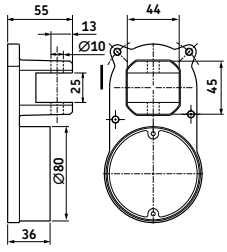

04

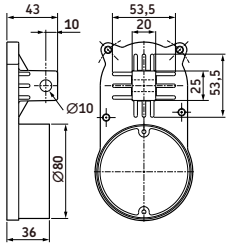

05

Technical data

		Unit	SJ 255	SJ 256	SJ 258	SJ 355	SJ 356	SJ 358
Rated push load		N	2 000	2 500	3 000	3 000	3 500	4 000
Rated pull load		N	2 000	2 500	3 000	3 000	3 500	4 000
Speed (full load	115 V AC	mm/s	6,6 to 7,2	5,5 to 6,0	4,0 to 4,5	6,6 to 7,2	5,5 to 6,0	4,5 to 3,7
to no load)	230 V AC	mm/s	5,4 to 5,9	4,4 to 4,9	3,3 to 3,7	5,4 to 5,9	4,4 to 4,9	3,3 to 3,7
Stroke[1)]		mm	100 to 600	100 to 600	100 to 600	100 to 600	100 to 600	100 to 600
Retracted length[2)]		mm	S+190/200/215	S+190/200/215	S+190/200/215	S+190/200/215	S+190/200/215	S+190/200/215
Voltage		V AC	115 or 230	115 or 230	115 or 230	115 or 230	115 or 230	115 or 230
Power consumption		W	N/A	N/A	N/A	N/A	N/A	N/A
Current consumption	115 V AC	A	1,4	1,4	1,4	1,6	1,6	1,6
	230 V AC	A	0,8	0,8	0,8	1,0	1,0	1,0
Duty cycle		%	17	17	17	17	17	17
Ambient temperature		°C	+10 to +40	+10 to +40	+10 to +40	+10 to +40	+10 to +40	+10 to +40
Type of protection		IP	52	52	52	52	52	52
Weight		kg	4,0	4,0	4,0	4,5	4,5	4,5
Color		–	Black	Black	Black	Black	Black	Black

[1)] Max. stroke for the tube version "I" is 250 mm.
[2)] For clevis mounting; "01" and "05" L=S+190 mm, "02" L=S+215 mm, "03" and "04" L=S+200 mm.

Technical data

		Unit	SJ 455	SJ 456	SJ 458
Rated push load		N	4 000	4 500	5 000
Rated pull load		N	4 000	4 500	5 000
Speed (full load	115 V AC	mm/s	6,6 to 7,2	5,5 to 6,0	4,0 to 4,5
to no load)	230 V AC	mm/s	5,4 to 5,9	4,4 to 4,9	3,3 to 3,7
Stroke[1)]		mm	100 to 600	100 to 600	100 to 600
Retracted length[2)]		mm	S+190/200/215	S+190/200/215	S+190/200/215
Voltage		V AC	115 or 230	115 or 230	115 or 230
Power consumption		W	N/A	N/A	N/A
Current consumption	115 V AC	A	1,8	1,8	1,8
	230 V AC	A	1,0	1,0	1,0
Duty cycle		%	17	17	17
Ambient temperature		°C	+10 to +40	+10 to +40	+10 to +40
Type of protection		IP	52	52	52
Weight		kg	5,0	5,0	5,0
Color		–	Black	Black	Black

[1)] Max. stroke for the tube version "I" is 250 mm.
[2)] For clevis mounting; "01" and "05" L=S+190 mm, "02" L=S+215 mm, "03" and "04" L=S+200 mm.

Performance diagrams

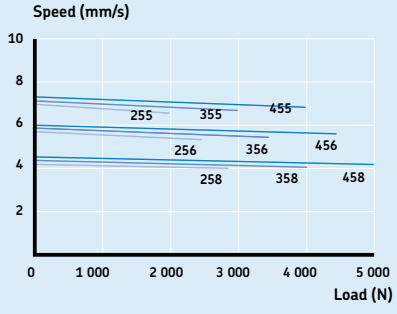

Speed-load diagram

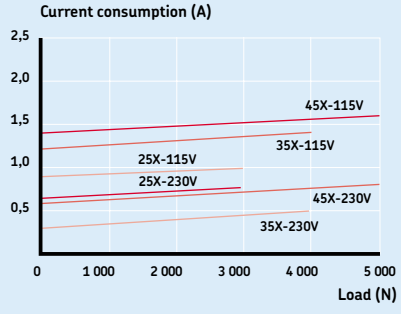

Current-load diagram

Ordering key

S J □□□ – □□□ – □ – □□ – □ – □ – □□□ □□

Type

Load / Speed:

2 000 N / 7,2 mm/s	255
2 500 N / 6,0 mm/s	256
3 000 N / 4,5 mm/s	258
3 000 N / 7,2 mm/s	355
3 500 N / 6,0 mm/s	356
4 000 N / 4,5 mm/s	358
4 000 N / 7,2 mm/s	455
4 500 N / 6.0 mm/s	456
5 000 N / 4,5 mm/s	458

Voltage:

115 V AC	115
230 V AC	230

Tube type:

With outer and inner tube	B
Inner tube with plastic dust protection cover	I
Inner tube only	Y

Mounting (see illustrations on page 143):

Square mounting	01
Tube mounting with 4 holes	02
Clevis mounting	03
Clevis mounting	04
Square mounting	05

Cable connector:

No connector	N
1x4C to control box	C
1x3C to AC plug, 1x3C to pedant	P
With one motor controller	L

Feedback:

Potentiometer	P
No sensor	N

Stroke:

100 mm	100
150 mm	150
200 mm	200
250 mm (250 mm is also the maximum stroke for tube versions "I" and "Y")	250
300 mm	300
350 mm	350
400 mm	400
450 mm	450
500 mm	500
550 mm	550
600 mm	600

Customized cable length options:

Specify requested cable length in dm	*XX*

Options shown in italics are only available on demand. Contact SKF for more information on minimum quantities and additional costs.

Linear actuator Magforce DSP

Benefits

- Modular
- Robust
- Reliable
- High speed and/or high load
- All metal design



Connecting diagram

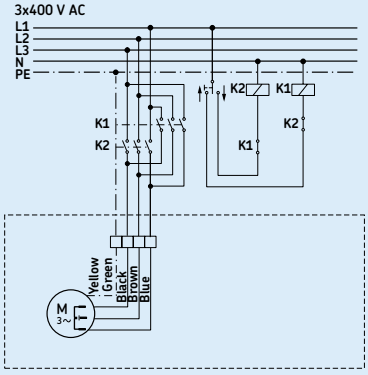

Dimensional drawing

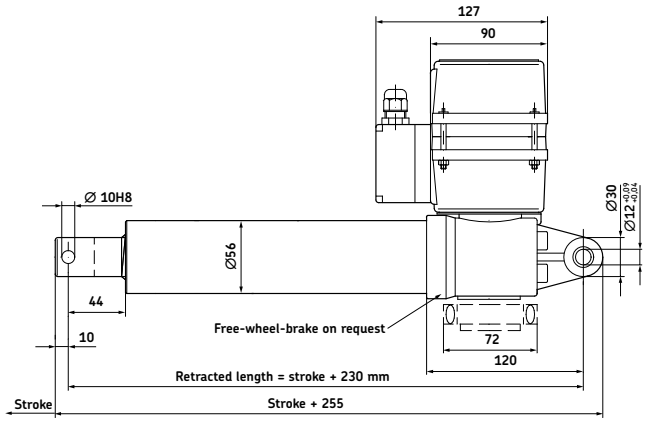

Side view

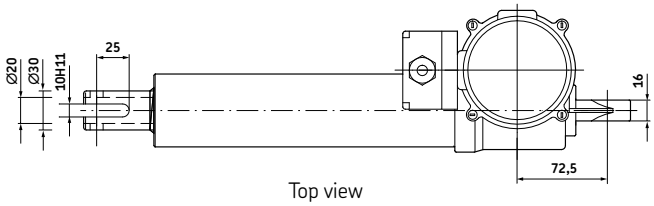

Top view

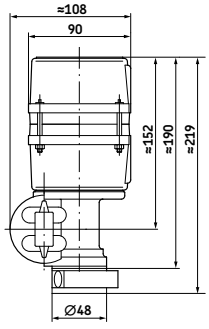

Rear view

Technical data

	Unit	DSP 1010	DSP 2530	DSP 3250	DSP 4550
Rated push load	N	1 000	2 500[1)]	3 200[2)]	4 500[3)]
Rated pull load	N	1 000	2 500	3 200	4 500
Speed (at full load)	mm/s	50	15	10	5
Stroke	mm	100 to 700	100 to 700	100 to 700	100 to 700
Retracted length	mm	S+230	S+230	S+230	S+230
Voltage	V AC	3×400	3×400	3×400	3×400
Power consumption	W	210	260	260	280
Current consumption	A	0,5	0,6	0,6	0,6
Duty cycle	%	40 (4/6)	40 (4/6)	40 (4/6)	40 (4/6)
Ambient temperature	°C	–10 to +40	–10 to +40	–10 to +40	–10 to +40
Type of protection	IP	54	54	54	54
Weight (at 200 mm stroke)	kg	5,6	5,6	5,6	5,6
Color	–	Silver	Silver	Silver	Silver

[1)] Push load allowed up to 500 mm stroke (if S>500 mm, only pull load is allowed)
[2)] Push load allowed up to 450 mm stroke (if S>450 mm, only pull load is allowed)
[3)] Push load allowed up to 350 mm stroke (if S>350 mm, only pull load is allowed)

Performance diagram

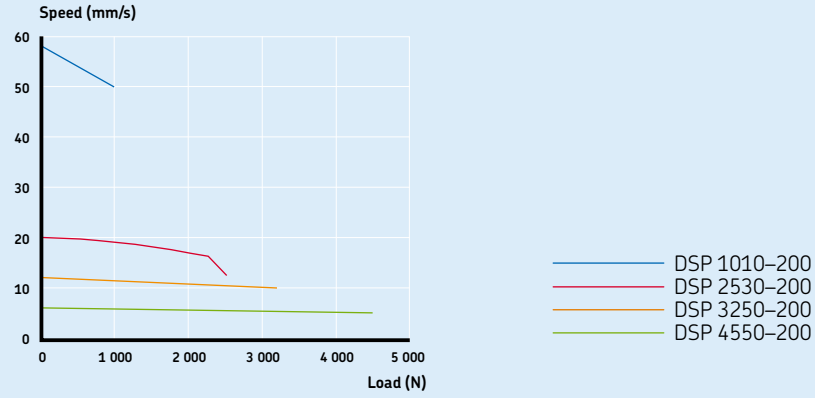

Speed-load diagram

Safety load factor conditions

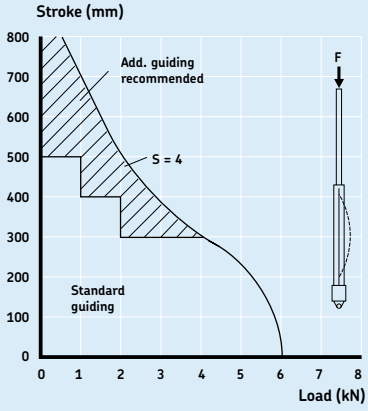

Bending of spindle S = safety factor Euler 3

Options

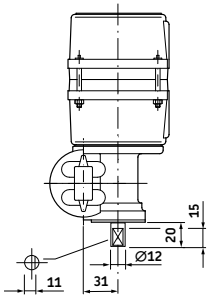

Extended motor shaft

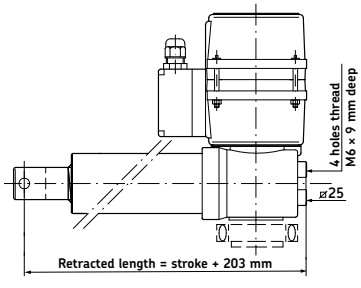

Rear screw fixing

Ordering key

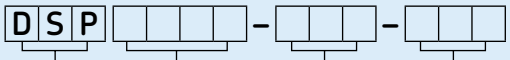

Type

Load:

1 000 N	1010
2 500 N	2530
3 200 N	3250
4 500 N	4550

Stroke (S):

100 mm	100
200 mm	200
300 mm	300
400 mm	400
500 mm	500
600 mm	600
700 mm	700

Customer option:

Standard	01
Bronze nut, special grease for –30°C	*08*
Additional bushing (L=S+280 mm)	*09*
Protection tube made out of stainless steel	*14*
Extended shaft	*122*
ATEX zone 22 (II 3 D T 150°C)	*131*
Others (rear attachment hole turned 90°, motor turned 90°, potentiometer, ...)	*XX*

Options shown in italics are only available on demand. Contact SKF for more information on minimum quantities and additional costs.

Accessories

	Designation	Order N°
Free wheel brake on push load	ZAC–1028,6226	M/0124682
Free wheel brake on pull load	ZAC–1028,0002	M/0125632
Friction brake for pull/push load	ZAC–1028,7851	M/0124683
Limit switch 100 mm stroke	ZAC–1043,0210–0100	M/0126970
Limit switch 200 mm stroke	ZAC–1043,0210–0200	M/0126971
Limit switch 300 mm stroke	ZAC–1043,0210–0300	M/0126972
Limit switch 400 mm stroke	ZAC–1043,0210–0400	M/0126973
Limit switch 500 mm stroke	ZAC–1043,0210–0500	M/0126974
Limit switch 600 mm stroke	ZAC–1043,0210–0600	M/0126975

Linear actuator CAP 32

Benefits

- Easy to install
- Robust and reliable
- Lubricated for service life
- Right- and left-hand version



Connecting diagram

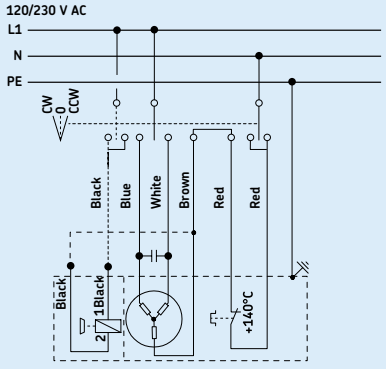

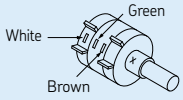

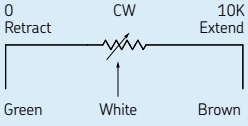

Connection diagram for rotating potentiometer.

Dimensional drawing

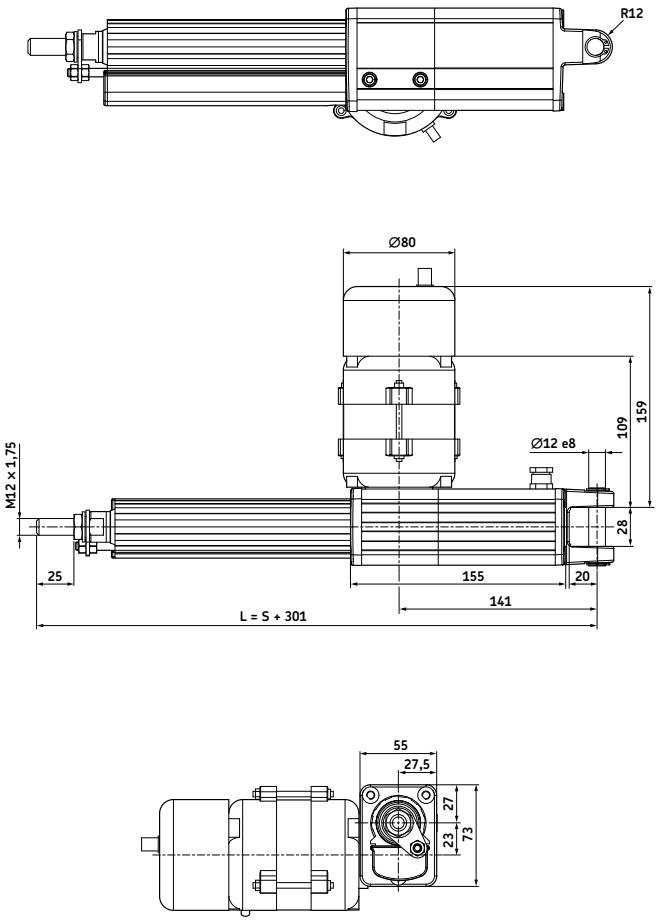

Legend:
S = stroke
L = retracted length

Technical data

		Unit	CAP 32
Rated push load		N	1 500 to 3 500
Rated pull load		N	1 500 to 3 500
Speed (at full load)		mm/s	6 to 32*
Stroke		mm	50 to 700
Retracted length		mm	S+301
Voltage		V AC	120 or 230
Power consumption	120 V AC	W	98 (brake 133,2 W)
	230 V AC	W	92 (brake 117,3 W)
Current consumption	120 V AC	A	0,82 (brake +0,29 A)
	230 V AC	A	0,4 (brake + 0,11 A)
Duty cycle		%	30
Ambient temperature		°C	–20 to +50
Type of protection		IP	20/54
Weight		kg	2,9 to 5,0

* Depending on selected motor

Performance diagrams

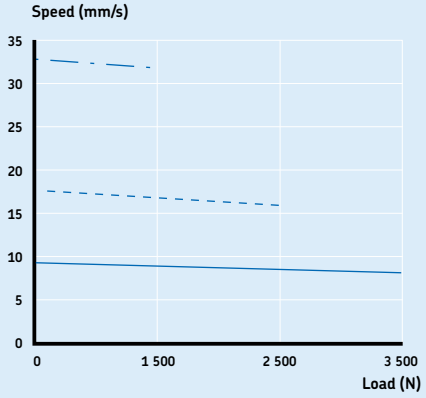

Speed-load diagram CAP 32 ... 120 V AC

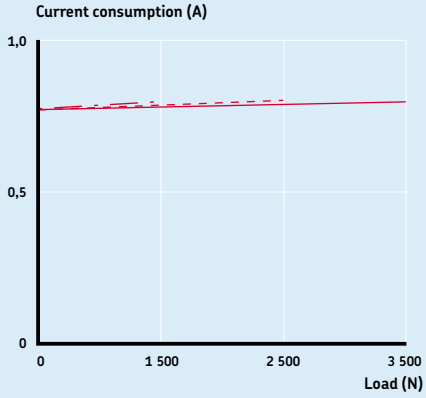

Current-load diagram CAP 32 ... 120 V AC

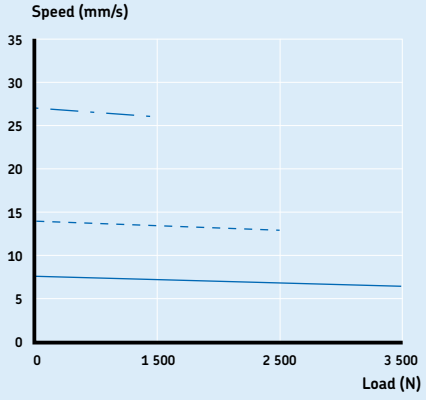

Speed-load diagram CAP 32 ... 230 V AC

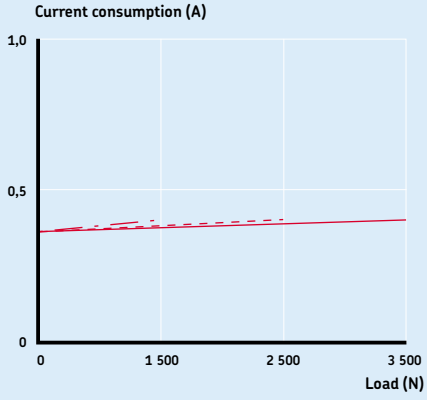

Current-load diagram CAP 32 ... 230 V AC

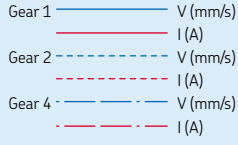

Duty cycle

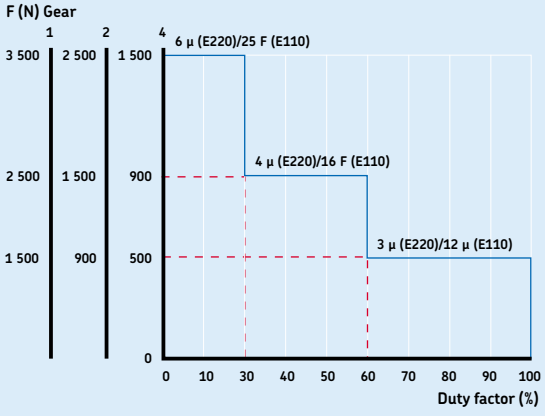

CAP 32 ... 230/120 V AC

Ordering key

Dynamic load (N) / Speed (mm/s)			Motor options	
3 500xx	2 500/xx	1 500/xx	No motor	0000
3 500/8	2 500/16	1 500/32	120 V AC/60 Hz, 1-phase, IP54	E110C
3 500/8	2 500/16	1 500/32	120 V AC/60 Hz, 1-phase, brake, IP20	E110CB
3 500/6	2 500/13	1 500/26	230 V AC/50 Hz, 1-phase, IP54	E220C
3 500/6	2 500/13	1 500/26	230 V AC/50 Hz, 1-phase, brake, IP20	E220CB
1	**2**	**4**		

C A P ☐ 3 2 X ☐ ☐ ☐ X ☐ ☐ / ☐ ☐ ☐ ☐ ☐ ☐

Type

Motor assembly:

Right	R
Left	L

Stroke (S):

50 mm	050
100 mm	100
200 mm	200
300 mm	300
500 mm	500
700 mm	700
Other stroke lengths	---

Option:

Back-up nut	S

Options shown in italics are only available on demand. Contact SKF for more information on minimum quantities and additional costs.

Linear actuator CAR 32

Benefits

- Industrial reliable and robust actuator
- Wide range of components
- Right- and left-hand version



Suitable control units and accessories

	Control unit: CAEV 110/220	Limit switch: CAXB 32*
E110C	●	●
E110CB	●	●
E220C	●	●
E220CB	●	●
CAES 31C	●	

Hand switch
Foot switch
Desk switch

* See page 379

Connecting diagram

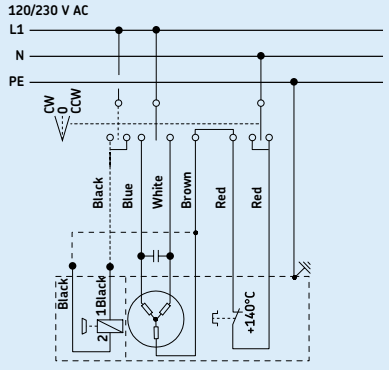

Dimensional drawing

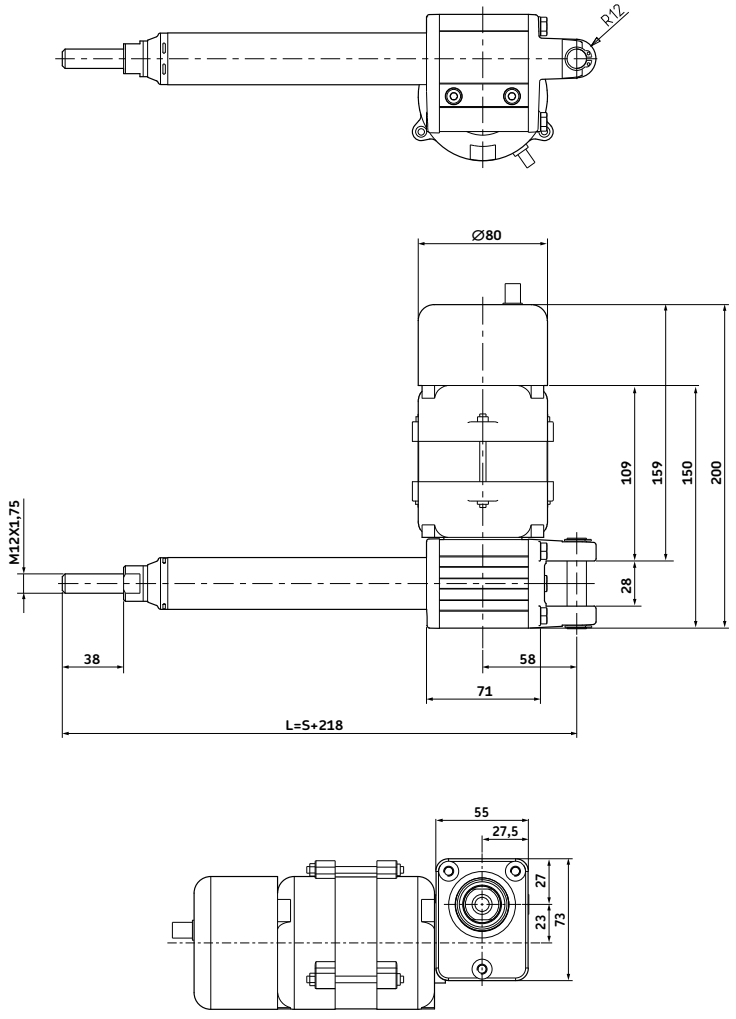

Legend:
S = stroke
L = retracted length

Technical data

		Unit	CAR 32
Rated push load		N	1 500 to 3 500
Rated pull load		N	1 500 to 3 500
Speed (at full load)		mm/s	6 to 32*
Stroke		mm	50 to 700
Retracted length		mm	S + 218
Voltage		V AC	120 or 230
Power consumption	120 V AC	W	98 (brake 133,2 W)
	230 V AC	W	92 (brake 117,3 W)
Current consumption	120 V AC	A	0,82 (brake +0,29 A)
	230 V AC	A	0,4 (brake + 0,11 A)
Duty cycle		%	30
Ambient temperature		°C	–20 to +70
Type of protection		IP	20/54
Weight		kg	2,1 to 3,7

* Depending on selected motor

Performance diagrams

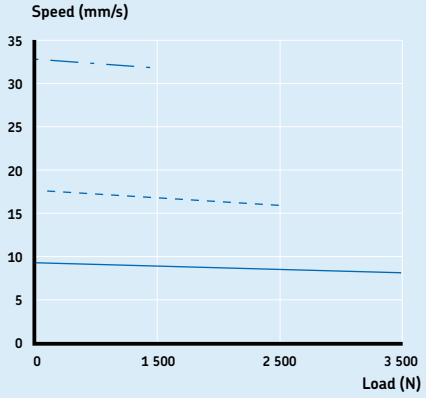

Speed-load diagram CAR 32 ... 120 V AC

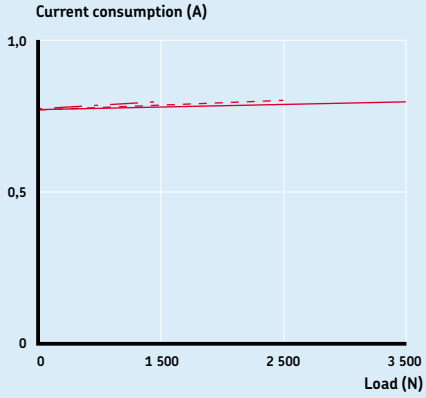

Current-load diagram CAR 32 ... 120 V AC

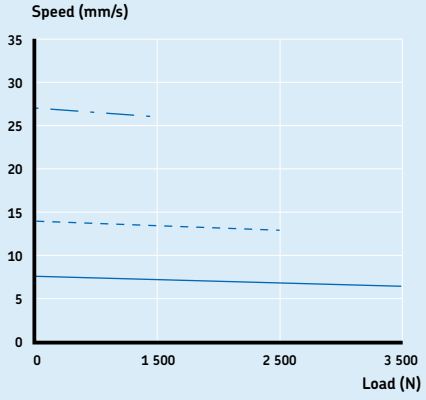

Speed-load diagram CAR 32 ... 230 V AC

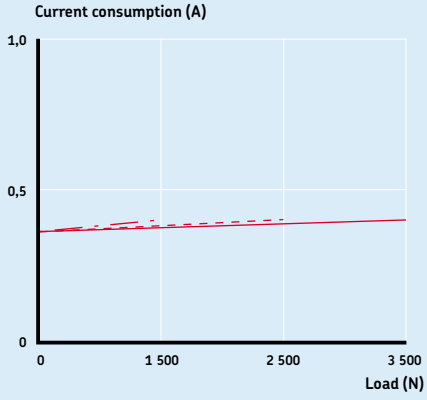

Current-load diagram CAR 32 ... 230 V AC

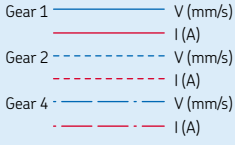

Duty cycle

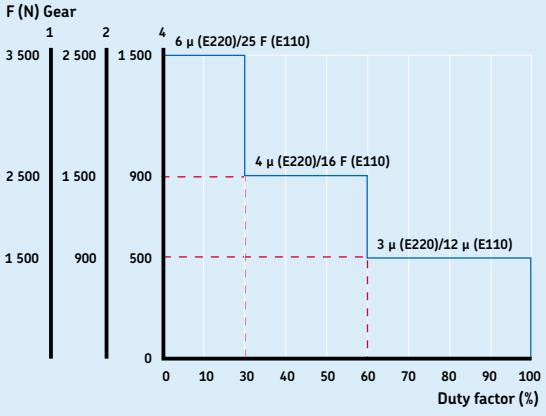

CAR 32 ... 230/120 V AC

Ordering key

Dynamic load (N) / Speed (mm/s)			Motor options	
3 500/xx	2 500/xx	1 500/xx	No motor	0000
3 500/8	2 500/16	1 500/32	120 V AC/60 Hz, 1-phase, IP54	E110C
3 500/8	2 500/16	1 500/32	120 V AC/60 Hz, 1-phase, brake, IP20	E110CB
3 500/6	2 500/13	1 500/26	230 V AC/50 Hz, 1-phase, IP54	E220C
3 500/6	2 500/13	1 500/26	230 V AC/50 Hz, 1-phase, brake, IP20	E220CB
1	**2**	**4**		

CAR □ 32X □□□ X □□ / □□□□□□

Type

Motor assembly:

Right	R
Left	L

Stroke (S):

50 mm	050
100 mm	100
200 mm	200
300 mm	300
500 mm	500
700 mm	700
Other stroke lengths	---

Option:

Friction clutch	F
Back-up nut	S

Options shown in italics are only available on demand. Contact SKF for more information on minimum quantities and additional costs.

Linear actuator CAT 32B

Benefits

- Compact
- Robust
- Modular
- Lubricated for service life
- High efficiency
- Digital encoder feedback



Suitable control units and accessories

	Control unit	Limit switch	Encoder
	CAEV 110/220	CAXB 32B[1]	E2[2]
E110C	●	●	●
E110CB	●	●	●
E220C	●	●	●
E220CB	●	●	●
E380C		●	●
CAES 31C	●		

Hand switch
Foot switch
Desk switch

[1] See page 379
[2] See page 380

Dimensional drawing

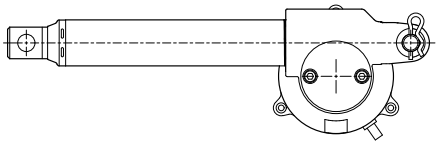

See drawings of front and rear attachments and motor options on page 276.

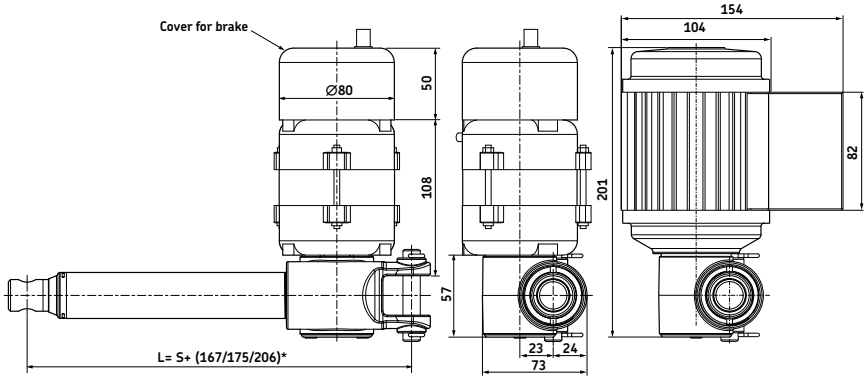

Legend:
S = stroke
L = retracted length

120 or 230 V AC motor

400 V AC motor

* Dimension depends on selected front attachment

Connecting diagrams

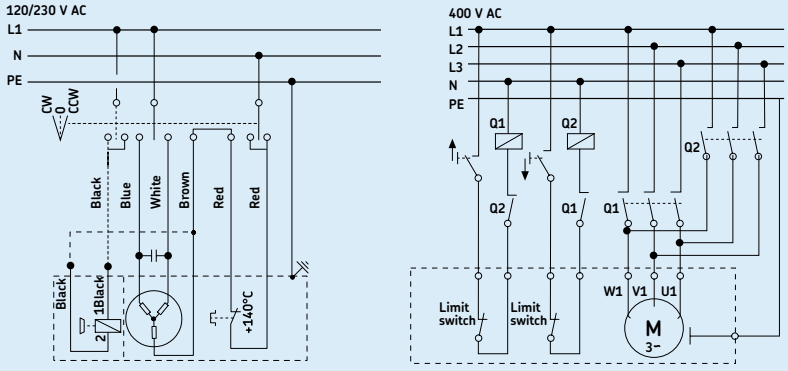

Technical data

		Unit	CAT 32B
Rated push load		N	1 500 to 3 500
Rated pull load		N	1 500 to 3 500
Speed (at full load)		mm/s	6,5 to 32[1]
Stroke		mm	50 to 700
Retracted length		mm	S+167/175/206[2]
Voltage		V AC	120, 230 or 400
Power consumption	120 V AC	W	98 (brake 133,2 W)
	230 V AC	W	92 (brake 117,3 W)
	400 V AC	W	80
Current consumption	120 V AC	A	0,82 (brake +0,29 A)
	230 V AC	A	0,4 (brake + 0,11 A)
	400 V AC	A	0,2
Duty cycle		%	30
Ambient temperature		°C	–20 to +50
Type of protection		IP	20/54/55
Weight		kg	2 to 3,5

[1] Depending on selected motor
[2] Dimension depends on selected front attachment

Performance diagrams

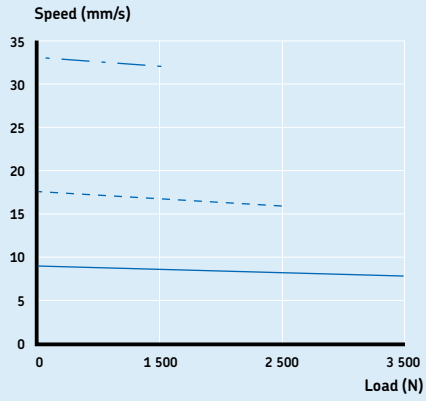

Speed-load diagram CAT 32B ... 120 V AC

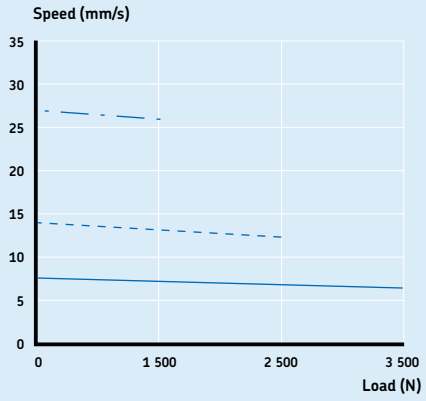

Speed-load diagram CAT 32B ... 230 V AC

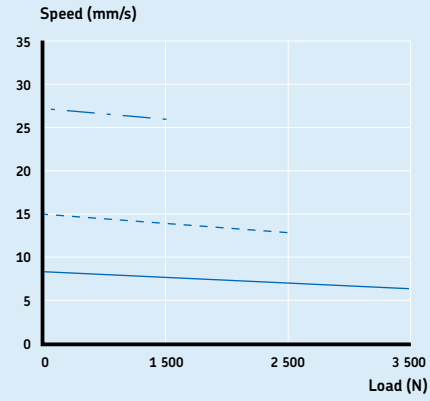

Speed-load diagram CAT 32B ... 400 V AC

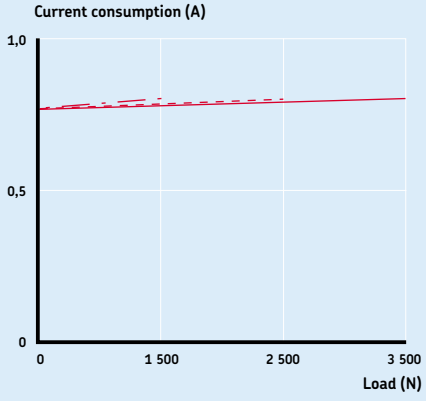

Current-load diagram CAT 32B ... 120 V AC

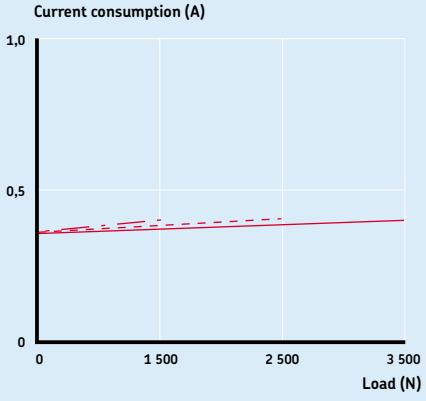

Current-load diagram CAT 32B ... 230 V AC

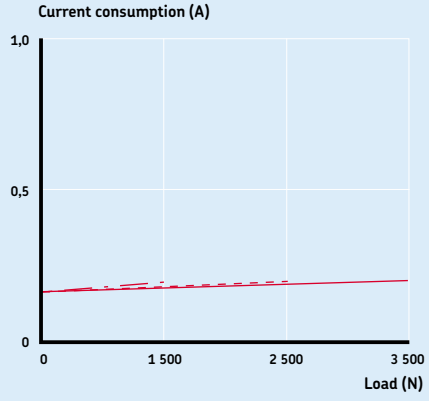

Current-load diagram CAT 32B ... 400 V AC



Duty cycle

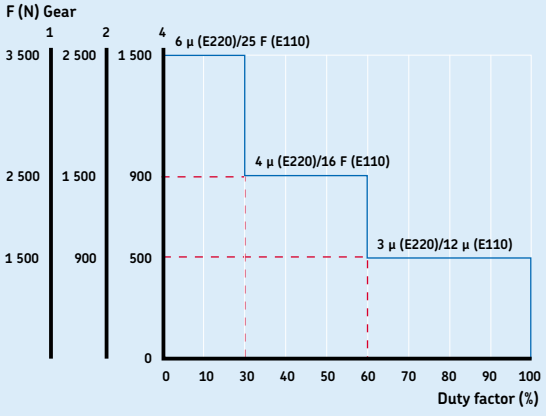

CAT 32B ... 230/120 V AC

Ordering key

Dynamic load (N) / Speed (mm/s)			Motor options	
4 000/xx	2 500/xx	1 500/xx	No motor	0000
3 500/8	2 500/16	1 500/32	120 V AC/60 Hz, 1-phase, IP54	E110C
3 500/8	2 500/16	1 500/32	120 V AC/60 Hz, 1-phase, brake, IP20	E110CB
3 500/6,5	2 500/13	1 500/26	230 V AC/50 Hz, 1-phase, IP54	E220C
3 500/6,5	2 500/13	1 500/26	230 V AC/50 Hz, 1-phase, brake, IP20	E220CB
3 500/7	2 500/14	1 500/28	400 V AC/50 Hz, 3-phase, IP55	E380C
1	2	4		

C A T [ ] 3 2 B X [ ] [ ] [ ] X [ ] [ ] [ ] [ ] [ ] [ ] [ ] / [ ] [ ] [ ] [ ] [ ] [ ]

Type

Motor assembly:

Right	R
Left	L

Stroke (S):

50 mm	050
100 mm	100
200 mm	200
300 mm	300
400 mm	400
500 mm	500
700 mm	700
Other stroke lengths	- - -

Rear attachment (see page 276):

Fork ear, ∅=12,0 mm	A1
Fork ear, ∅=12,7 mm	A2
Single ear, ∅=12,0 mm	K1
Single ear, ∅=12,7 mm	K2

Front attachment (see page 276):

Hole, ∅=12,0 mm	G1
Hole, ∅=12,7 mm	G2
Male thread, M12	G3
Female thread, M12	G4
Fork ear, ∅=10,1 mm	G5

Feedback:

No encoder (no code)	
Encoder (for all standard motors)	E2

Option:

Friction clutch (not available with option encoder)	F
No friction clutch	Z
Back-up nut	S

Options shown in italics are only available on demand. Contact SKF for more information on minimum quantities and additional costs.

Linear actuator CAT 33

Benefits

- Small
- Robust
- Highly efficient
- Lubricated for service life
- Digital encoder feedback



Suitable control units and accessories

	Control unit CAEV 110/220	Limit switch CAXC 33[1]	Encoder E2[2]
E110C	●	●	●
E110CB	●	●	●
E220C	●	●	●
E220CB	●	●	●
E380C		●	●
CAES 31C	●		

Hand switch
Foot switch
Desk switch

[1] See page 378
[2] See page 380

Dimensional drawing

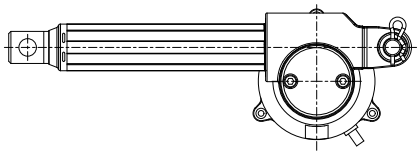

See drawings of front and rear attachments and motor options on page 276.

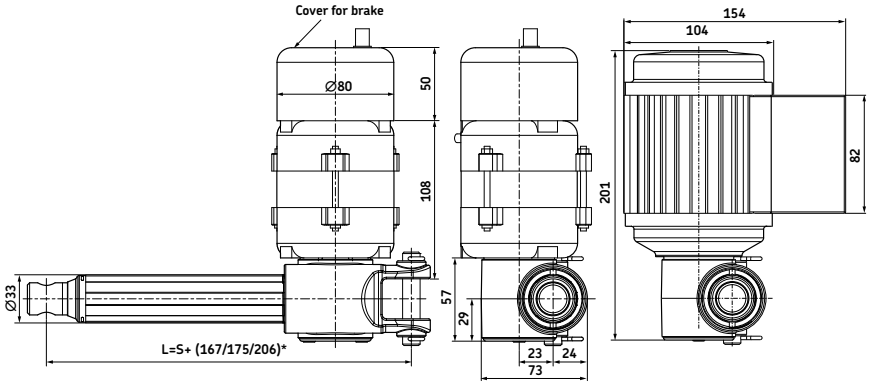

Legend:
S = stroke
L = retracted length

120 or 230 V AC motor

400 V AC motor

* Dimension depends on selected front attachment

Connecting diagrams

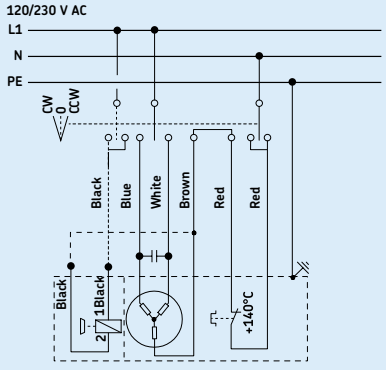

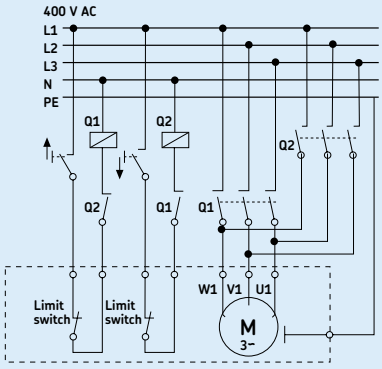

Technical data

		Unit	CAT 33
Rated push load		N	800 to 3 000
Rated pull load		N	800 to 3 000
Speed (at full load)		mm/s	5 to 24[1]
Stroke		mm	100 to 400
Retracted length		mm	S+150/158/189[2]
Voltage		V AC	120, 230 or 400
Power consumption	120 V AC	W	98 (brake 133,2W)
	230 V AC	W	92 (brake 117,3W)
	400 V AC	W	80
Current consumption	120 V AC	A	0,82 (brake +0,29A)
	230 V AC	A	0,4 (brake + 0,11A)
	400 V AC	A	0,2
Duty cycle		%	30
Ambient temperature		°C	–20 to +50
Type of protection		IP	20/54/55
Weight		kg	2 to 2,7

[1] Depending on selected motor
[2] Dimension depends on selected front attachment

Performance diagrams

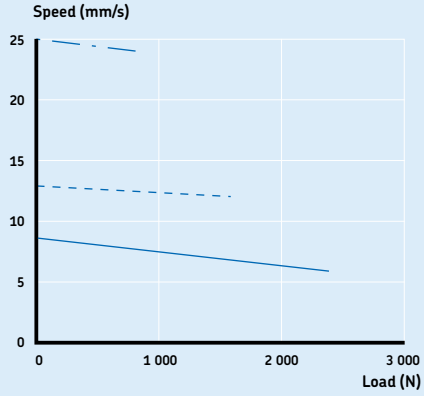

Speed-load diagram CAT 33 ... 120 V AC

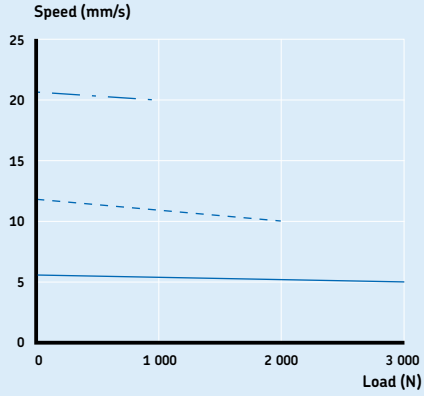

Speed-load diagram CAT 33 ... 230 V AC

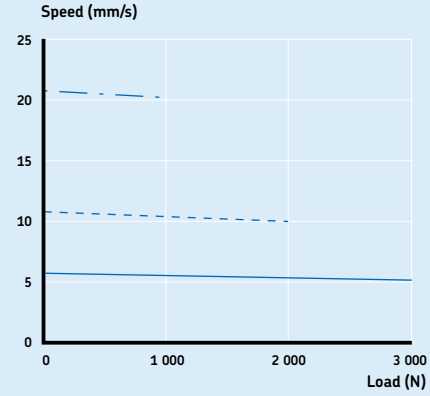

Speed-load diagram CAT 33 ... 400 V AC

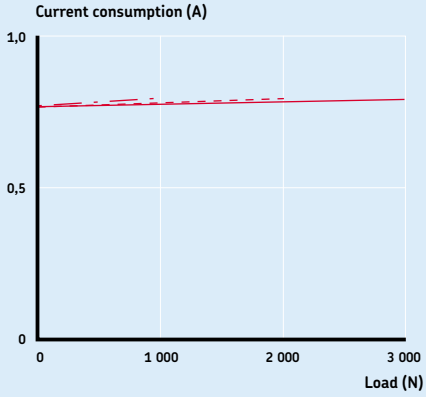

Current-load diagram CAT 33 ... 120 V AC

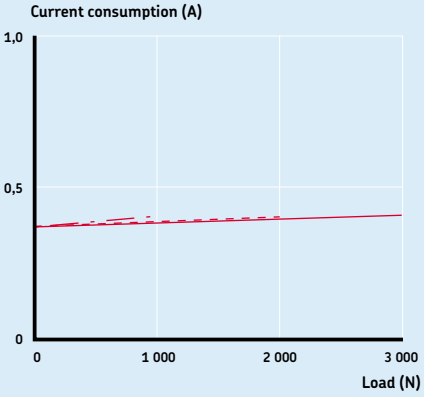

Current-load diagram CAT 33 ... 230 V AC

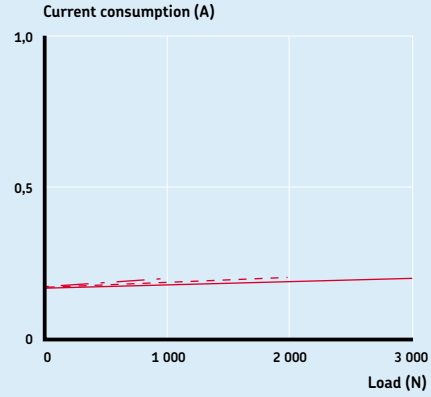

Current-load diagram CAT 33 ... 400 V AC



Duty cycle

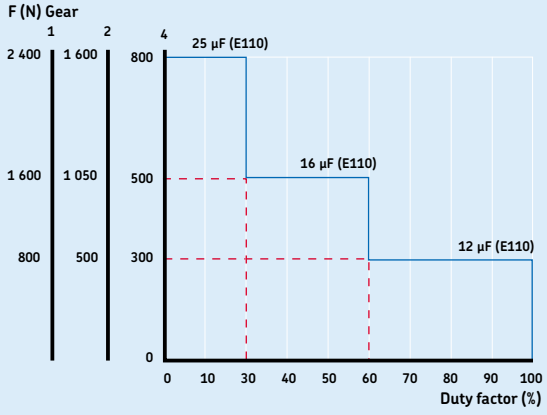

CAT 33 ... 120 V AC

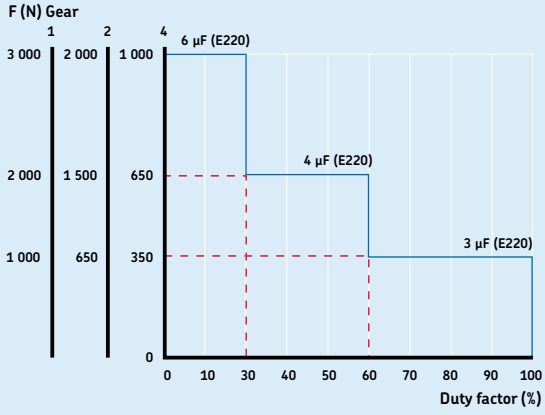

CAT 33 ... 230 V AC

Ordering key

Dynamic load (N) / Speed (mm/s)			Motor options	
3 000/xx	2 000/xx	1 000/xx	No motor	0000
2 400/6	1 600/12	800/24	120 V AC/60 Hz, 1-phase, IP54	E110C
2 400/6	1 600/12	800/24	120 V AC/60 Hz, 1-phase, brake, IP20	E110CB
3 000/5	2 000/10	1 000/20	230 V AC/50 Hz, 1-phase, IP54	E220C
3 000/5	2 000/10	1 000/20	230 V AC/50 Hz, 1-phase, brake, IP20	E220CB
3 000/5	2 000/10	1 000/20	400 V AC/50 Hz, 3-phase, IP55	E380C
1	**2**	**4**		

C A T ☐ 3 3 X ☐ ☐ ☐ X ☐ ☐ ☐ ☐ ☐ ☐ ☐ / ☐ ☐ ☐ ☐ ☐ ☐

Type

Motor assembly:

Right	R
Left	L

Stroke (S):

100 mm	100
200 mm	200
300 mm	300
400 mm	400
Other stroke lengths	- - -

Rear attachment (see page 276):

Fork ear, ∅=12,0 mm	A1
Fork ear, ∅=12,7 mm	A2
Single ear, ∅=12,0 mm	K1
Single ear, ∅=12,7 mm	K2

Front attachment (see page 276):

Hole, ∅=12,0 mm	G1
Hole, ∅=12,7 mm	G2
Male thread, M12	G3
Female thread, M12	G4
Fork ear, ∅=10,1 mm	G5

Feedback:

No encoder (no code)	
Encoder (for all standard motors)	E2

Option:

Friction clutch (not available with option encoder)	F
No friction clutch	Z

Options shown in italics are only available on demand. Contact SKF for more information on minimum quantities and additional costs.

Linear actuator Magforce WSP

Benefits

- Modular
- Robust
- Reliable
- High speed and/or high load
- All metal design



Connecting diagram

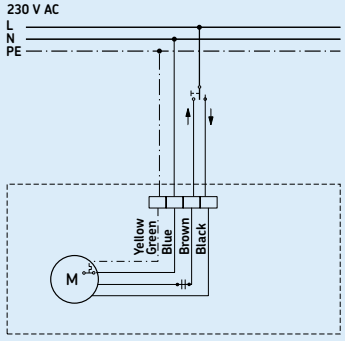

Dimensional drawing

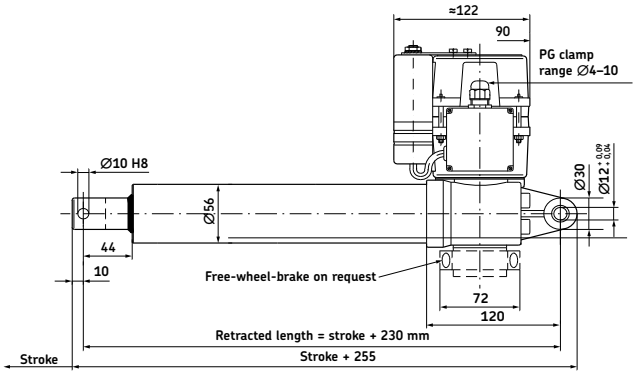

Side view

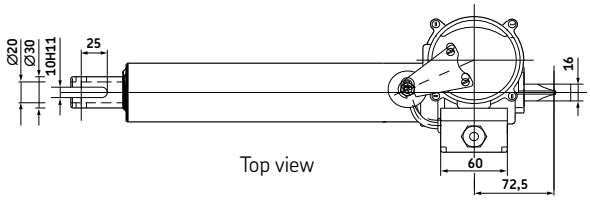

Top view

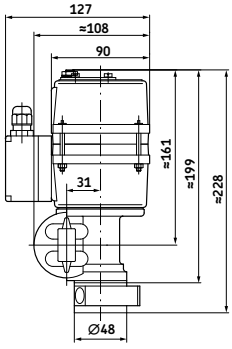

Rear view

Technical data

	Unit	WSP 0510	WSP 1030	WSP 1550	WSP 2650
Rated push load	N	500	1 000	1 500[1)]	2 600[2)]
Rated pull load	N	500	1 000	1 500	2 600
Speed (at full load)	mm/s	50	18	10	5
Stroke	mm	100 to 700	100 to 700	100 to 700	100 to 700
Retracted length	mm	S+230	S+230	S+230	S+230
Voltage	V AC	230	230	230	230
Power consumption	W	230	200	200	230
Current consumption	A	1,1	1	1	1,1
Duty cycle	%	25 (2,5/7,5)	25 (2,5/7,5)	25 (2,5/7,5)	25 (2,5/7,5)
Ambient temperature	°C	–10 to +40	–10 to +40	–10 to +40	–10 to +40
Type of protection	IP	54	54	54	54
Weight (at 200 mm stroke)	kg	5,5	5,5	5,5	5,5
Color	–	Silver	Silver	Silver	Silver

[1)] Push load allowed up to 650 mm stroke (if S>650 mm, only pull load is allowed)
[2)] Push load allowed up to 500 mm stroke (if S>500 mm, only pull load is allowed)

Performance diagram

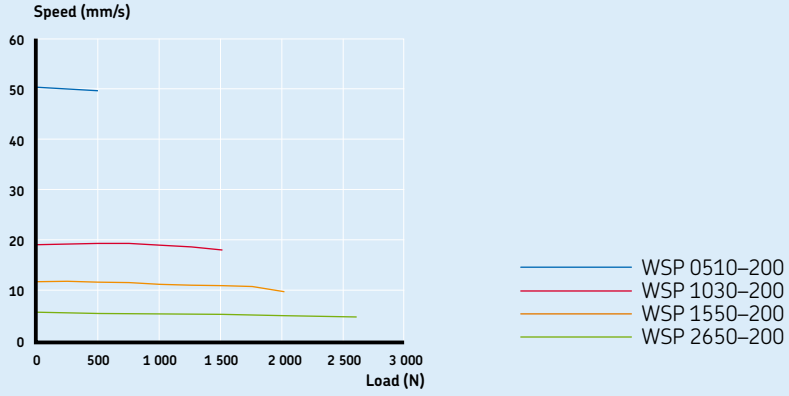

Speed-load diagram

Safety load factor conditions

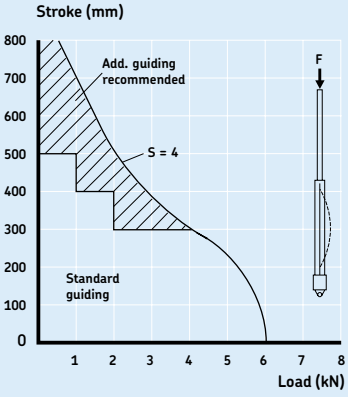

Bending of spindle S = safety factor Euler 3

Options

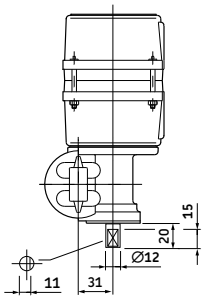

Extended motor shaft

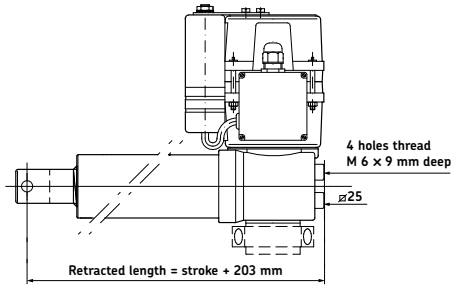

Rear screw fixing

Ordering key

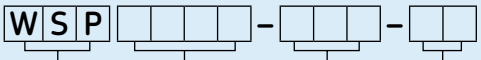

Type

Load:

500 N	0510
1 000 N	1030
1 500 N	1550
2 600 N	2650

Stroke (S):

100 mm	100
200 mm	200
300 mm	300
400 mm	400
500 mm	500
600 mm	600
700 mm	700

Customer option:

Standard	01
Additional bushing (L=S+280 mm)	*15*
Extended shaft	*16*
Protection tube made out of stainless steel	*30*
Bronze nut, special grease for -30°C	*91*
Others (rear attachment hole turned 90°, motor turned 90°, potentiometer, ...)	*XX*

Options shown in italics are only available on demand. Contact SKF for more information on minimum quantities and additional costs.

Accessories

	Designation	Order N°
Free wheel brake on push load	ZAC–1028,6226	M/0124682
Free wheel brake on pull load	ZAC–1028,0002	M/0125632
Friction brake for pull/push load	ZAC–1028,7851	M/0124683
Limit switch 100 mm stroke	ZAC–1043,0209–100	M/0126964
Limit switch 200 mm stroke	ZAC–1043,0209–200	M/0126965
Limit switch 300 mm stroke	ZAC–1043,0209–300	M/0126966
Limit switch 400 mm stroke	ZAC–1043,0209–400	M/0126967
Limit switch 500 mm stroke	ZAC–1043,0209–500	M/0126968
Limit switch 600 mm stroke	ZAC–1043,0209–600	M/0126969

Linear actuator CAHB–30 series

Benefits

- ACME screw drive
- Extension tube (stainless steel)
- Protection tube (steel)
- Enhanced corrosion resistance
- Mechanical overload protection (clutch)
- Lubricated for service life
- Robust, designed for tough environment
- Self-locking
- Motor with thermal protection



Connecting diagram

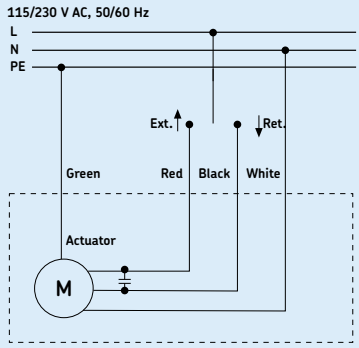

Different rear attachment

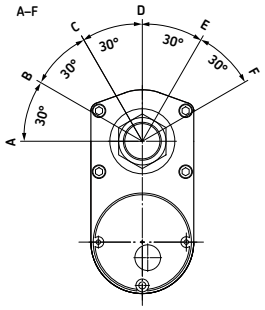

Dimensional drawing

Basic configuration (dashed line for optional limit switch)

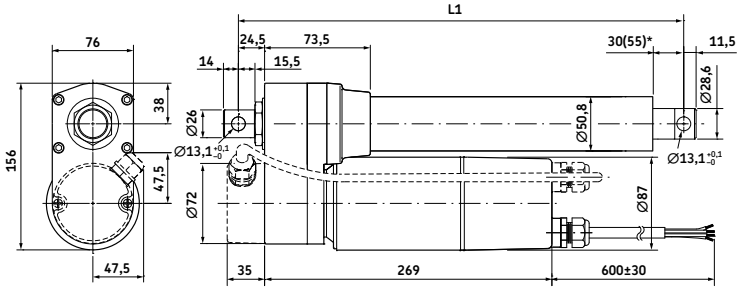

Legend:
L1 = retracted length
* 55 = dimension with limit switch

	With limit switch[1]						Without limit switch[2]					
Stroke (mm)	**102**	**153**	**204**	**305**	**457**	**610**	**102**	**153**	**204**	**305**	**457**	**610**
L1 Retracted length	440	440	440	592	744	897	380	415	415	465	668	821

[1] Tolerance: S and L1 = ± 5,0 mm (If S≥305 mm, S = ± 7,5 mm)

[2] Tolerance: S = ± 2,5 mm and L1 = ± 3,8 mm

Technical data

		Unit	CAHB–30... 1	CAHB–30... 2
Rated push load		N	1 500	2 300
Rated pull load		N	1 500	2 300
Speed (full load to no load)	115 VAC/60 Hz	mm/s	25 to 26	12 to 13
	230 VAC/50 Hz	mm/s	21 to 22	11 to 12
Stroke		mm	102 to 610	102 to 610
Retracted length		mm	–*	–*
Voltage		V AC	115 or 230	115 or 230
Power consumption		W	N/A	N/A
Current consumption	115 V AC/60 Hz	A	2,3	1,8
	230 V AC/50 Hz	A	1,35	1,4
Duty cycle		%	25	25
Ambient temperature		°C	–26 to +65	–26 to +65
Type of protection		IP	65	65
Weight (at 305 mm stroke)		kg	9	9
Color		–	Black	Black

* See above table
For outdoors application, please contact SKF.

Performance diagrams

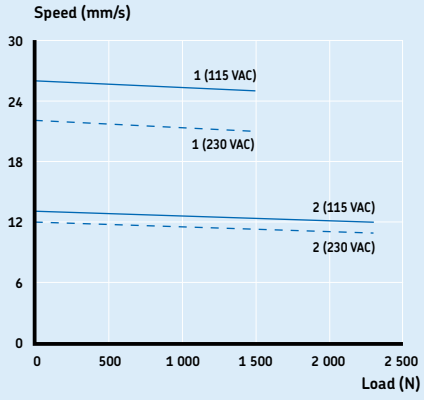

Speed-load diagram

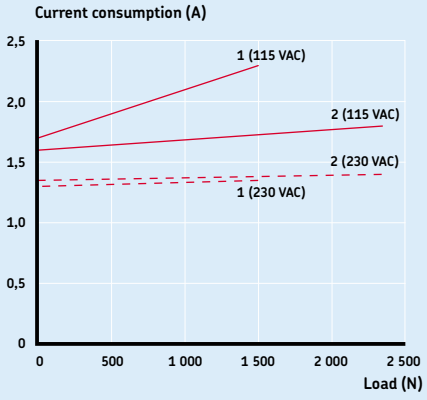

Current-load diagram

Dimensional drawing

Optional potentiometer (dashed line for optional limit switch)

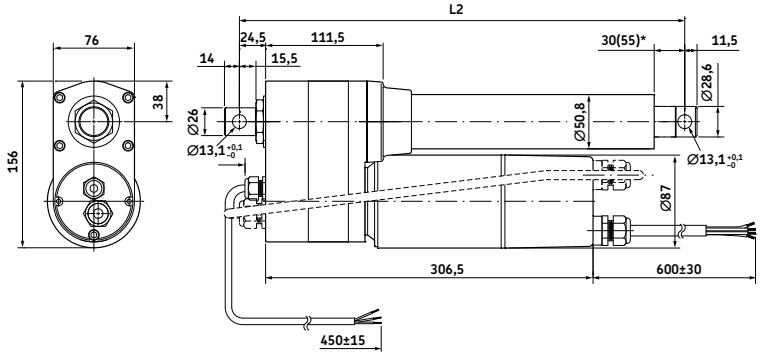

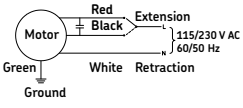

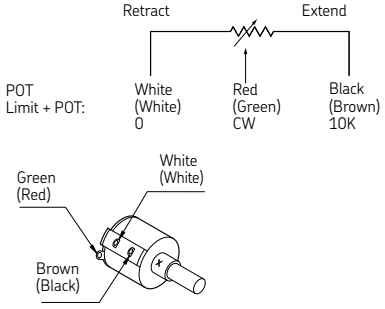

Legend
L2 = retracted length
* 55 = dimension with limit switch

	With limit switch[1]						Without limit switch[2]					
Stroke (mm)	**102**	**153**	**204**	**305**	**457**	**610**	**102**	**153**	**204**	**305**	**457**	**610**
L2 Retracted length	478	478	478	630	782	935	418	453	453	503	706	859

[1] Tolerance: S and L2 = ± 5,0 mm (If S≥305 mm, S = ± 7,5 mm)

[2] Tolerance: S = ± 2,5 mm and L2 = ± 3,8 mm

Potentiometer resolution

Stroke (mm)	**102**	**153**	**204**	**305**	**457**	**610**
Ohm/mm	59,0	59,0	29,5	29,5	9,84	9,84

Ordering key

CAHB–30–□□A–□□□□□□–A□□□□0–000

Type

Voltage:

115 V AC	N
230 V AC	P

Load:

1 500 N	1
2 300 N	2

Screw:

Acme screw	A

Stroke:

102 mm	102
153 mm	153
204 mm	204
305 mm	305
457 mm	457
610 mm	610

Retracted length:

Stroke		
with L.S.[1]	w/o POT[2]	with POT[2]
102 mm	440 mm	478 mm
153 mm	440 mm	478 mm
204 mm	440 mm	478 mm
305 mm	592 mm	630 mm
457 mm	744 mm	782 mm
610 mm	897 mm	935 mm
w/o L.S.[1]		
102 mm	380 mm	418 mm
153 mm	415 mm	453 mm
204 mm	415 mm	453 mm
305 mm	465 mm	503 mm
457 mm	668 mm	706 mm
610 mm	821 mm	859 mm

IP:

Standard (IP 65)	A

Front attachment:

Standard (hole: ∅ 13,1 mm)	A
Customized	*X*

Rear attachment:

Standard (0° and hole: ∅ 13,1 mm)	A
30°	B
60°	C
90°	D
120°	E
150°	F
Customized	*X*

Option 1:

None	0
Limit switch (only for load version 2 300 N)	L

Option 2:

None	0
Potentiometer	P

Options shown in italics are only available on demand. Contact SKF for more information on minimum quantities and additional costs.

[1] L.S.= Limit Switch
[2] POT= Potentiometer

Linear actuator CAT 33H

Benefits

- Compact
- Robust
- Modular
- Lubricated for service life
- High speed
- Digital encoder feedback



Suitable control units and accessories

	Control unit	Encoder
	CAEV 110/220	E2[1]
E110C	●	●
E110CB	●	●
E220C	●	●
E220CB	●	●
E380C	●	●
CAES 31C	●	

Hand switch
Foot switch
Desk switch

[1] See page 380

Dimensional drawing

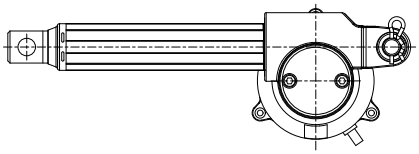

See drawings of front and rear attachments and motor options on page 276.

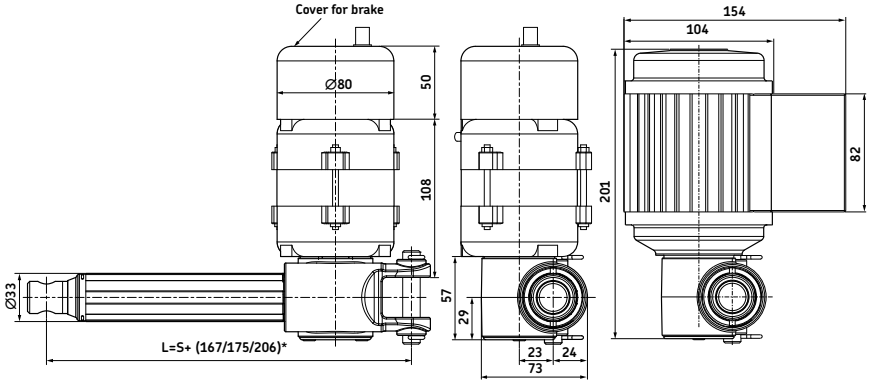

Legend:
S = stroke
L = retracted length

120 or 230 V AC motor

400 V AC motor

* Dimension depends on selected front attachment

Connecting diagrams

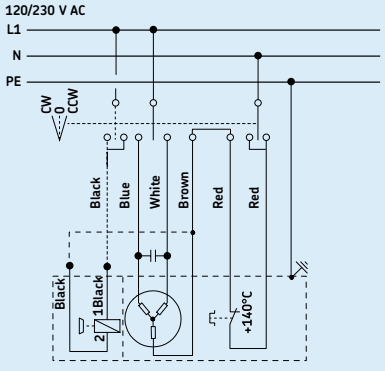

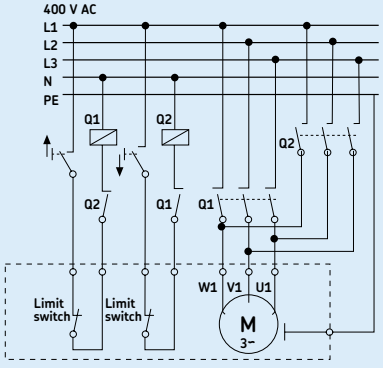

Technical data

		Unit	CAT 33H
Rated push load		N	500 to 1 200
Rated pull load		N	500 to 1 200
Speed (at full load)		mm/s	20 to 90[1]
Stroke		mm	100 to 400
Retracted length		mm	S+150/158/189[2]
Voltage		V AC	120, 230 or 400
Power consumption	120 V AC	W	98 (brake 133,2W)
	230 V AC	W	92 (brake 117,3W)
	400 V AC	W	80
Current consumption	120 V AC	A	0,82 (brake +0,29A)
	230 V AC	A	0,4 (brake + 0,11A)
	400 V AC	A	0,2
Duty cycle		%	30
Ambient temperature		°C	–20 to +50
Type of protection		IP	20/54/55
Weight		kg	2 to 2,7

[1] Depending on selected motor
[2] Dimension depends on selected front attachment

Performance diagrams

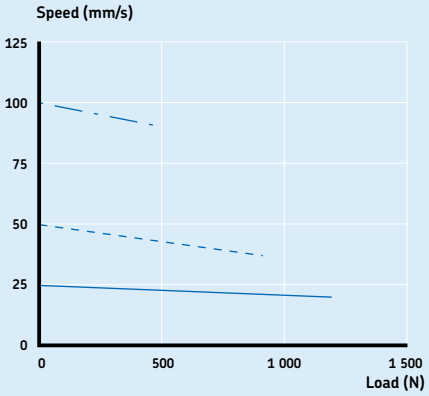

Speed-load diagram CAT 33H ... 120 V AC

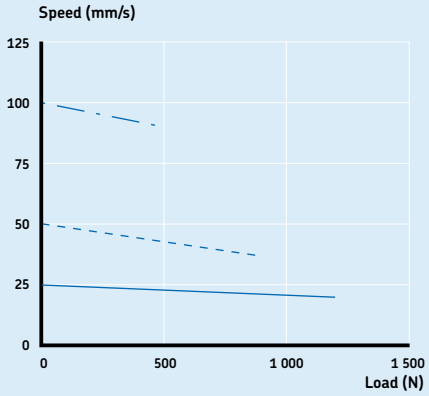

Speed-load diagram CAT 33H ... 230 V AC

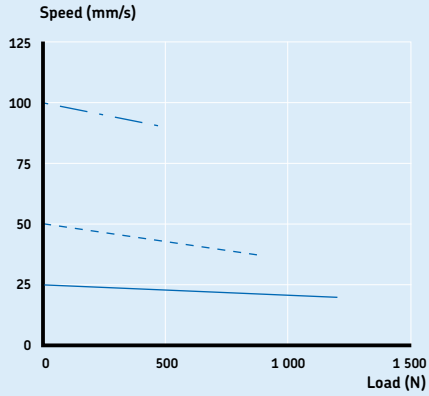

Speed-load diagram CAT 33H ... 400 V AC

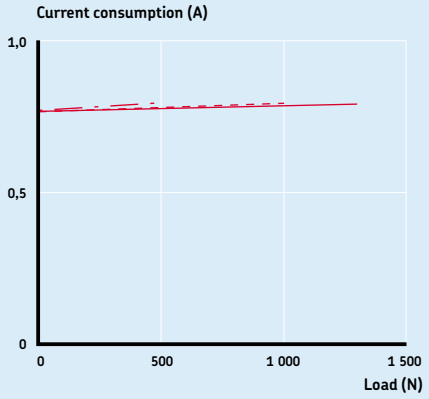

Current-load diagram CAT 33H ... 120 V AC

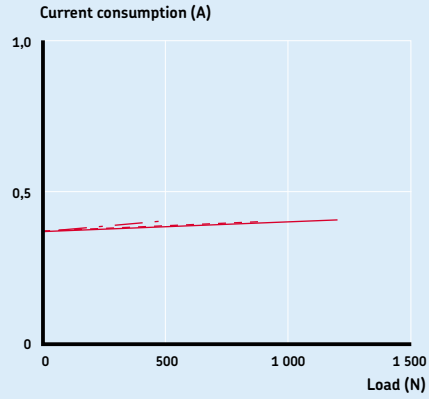

Current-load diagram CAT 33H ... 230 V AC

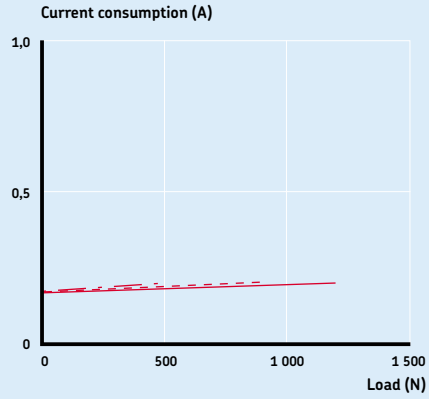

Current-load diagram CAT 33H ... 400 V AC



Duty cycle

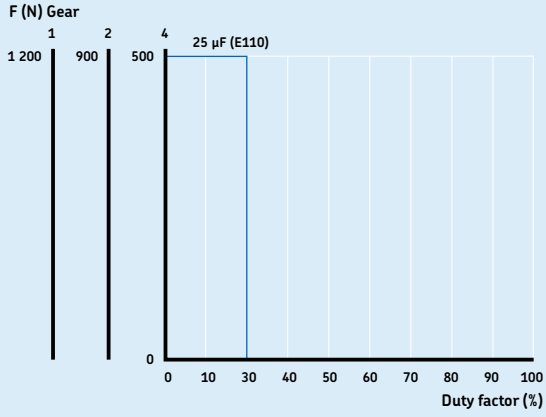

CAT 33H ... 120 V AC

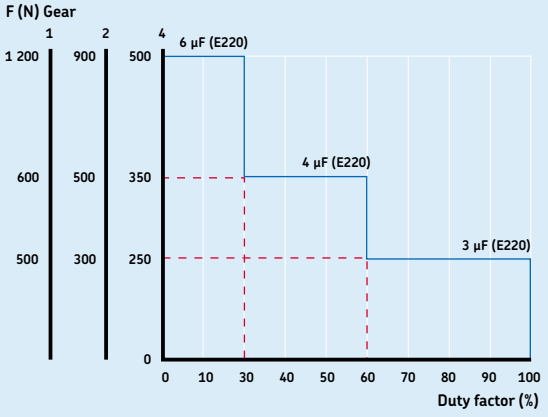

CAT 33H ... 230 V AC

Ordering key

Dynamic load (N) / Speed (mm/s)			Motor options	
1 200/xx	900/xx	600/xx	No motor	0000
1 200/20	900/37	500/90	120 V AC/60 Hz, 1-phase, IP54	E110C
1 200/20	900/37	500/90	120 V AC/60 Hz, 1-phase, brake, IP20	E110CB
1 200/20	900/37	500/90	230 V AC/50 Hz, 1-phase, IP54	E220C
1 200/20	900/37	500/90	230 V AC/50 Hz, 1-phase, brake, IP20	E220CB
1 200/20	900/37	500/90	400 V AC/50 Hz, 3-phase, IP55	E380C
1	**2**	**4**		

C A T [ ] 3 3 H X [ ] [ ] [ ] X [ ] [ ] [ ] [ ] [ ] [ ] [ ] / [ ] [ ] [ ] [ ] [ ] [ ]

Type

Motor assembly:

Right	R
Left	L

Stroke (S):

100 mm	100
200 mm	200
300 mm	300
400 mm	400
Other stroke lengths	- - -

Rear attachment (see page 276):

Fork ear, ∅=12,0 mm	A1
Fork ear, ∅=12,7 mm	A2
Single ear, ∅=12,0 mm	K1
Single ear, ∅=12,7 mm	K2

Front attachment (see page 276):

Hole, ∅=12,0 mm	G1
Hole, ∅=12,7 mm	G2
Male thread, M12	G3
Female thread, M12	G4
Fork ear, ∅=10,1 mm	G5

Feedback:

No encoder (no code)	
Encoder (for all standard motors)	E2

Option:

Friction clutch (not available with option encoder)	F
No friction clutch	Z

Options shown in italics are only available on demand. Contact SKF for more information on minimum quantities and additional costs.



Linear actuators – DC version

SKG 180
STG 184
RUNNER 188
MATRIX 3 192
CAR 40 196
ECOMAG 200
FD 204
Magdrive 208
CAHB–21 212
ASM 216
CAP 43B 220
CAT 32B 224
MATRIX 1 228
CAR 32 232
CAP 32 236
CAP 43A 240
CAT 33 244
CAHB–20 248
CARE 33 252
CAR 22 256
CAT 33H 260
CAHB–10 264
CALA 36 268
CAT 21B 272

Linear actuator Magforce SKG

Benefits

- Modular
- Robust
- Reliable
- High speed and/or high load
- All metal design



Dimensional drawing

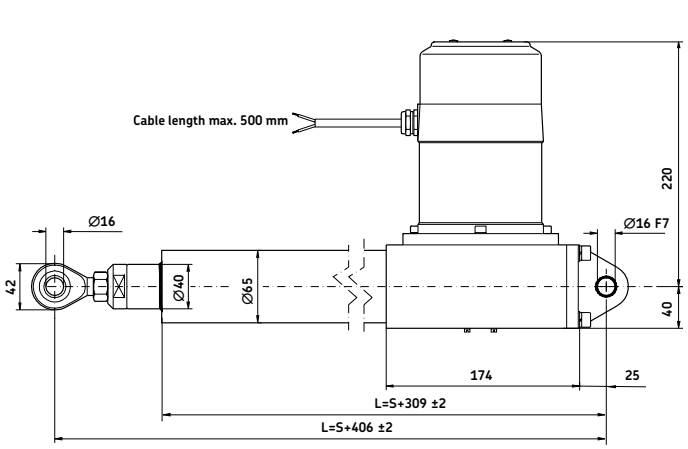

Side view

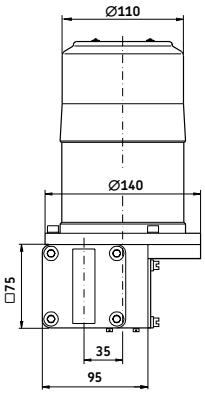

Rear view

Legend:
S = stroke
L = retracted length

Connecting diagrams

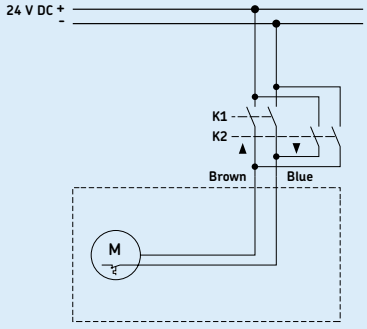

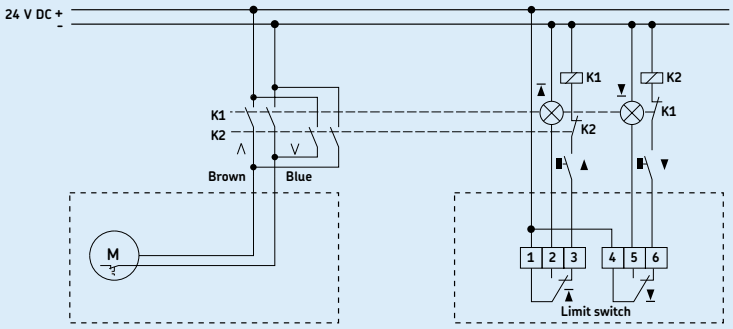

With optional limit switch

Technical data

	Unit	SKG 6005	SKG 10010	SKG 13020	SKG 15040
Rated push load	N	6 000	10 000	13 000	15 000
Rated pull load	N	6 000	10 000	13 000	15 000
Speed (at full load)	mm/s	55	27	15	8
Stroke	mm	100 to 700	100 to 700	100 to 700	100 to 700
Retracted length	mm	S+406	S+406	S+406	S+406
Voltage	V DC	24	24	24	24
Power consumption	W	N/A	720	672	–
Current consumption	A	N/A	30	28	–
Duty cycle	%	10 (1/9)	10 (1/9)	10 (1/9)	10 (1/9)
Ambient temperature	°C	–10 to +40	–10 to +40	–10 to +40	–10 to +40
Type of protection	IP	54	54	54	54
Weight (at 200 mm stroke)	kg	14,6	14,6	14,6	14,6
Color	–	Silver	Silver	Silver	Silver

Performance diagram

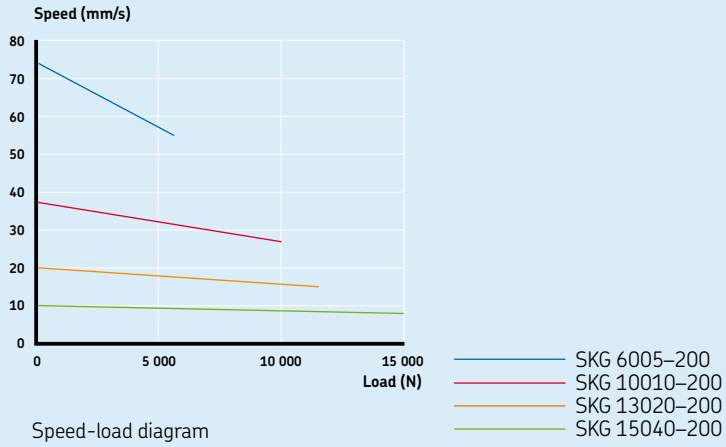

Speed-load diagram

Ordering key

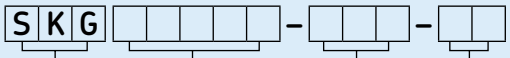

Type

Load:

6 000 N	06005
10 000 N	10010
13 000 N	13020
15 000 N	15040

Stroke (S):

100 mm	100
200 mm	200
300 mm	300
400 mm	400
500 mm	500
600 mm	600
700 mm	700

Customer option:

Standard	01
Others (brake, limit switch, extended motor shaft, encoder, potentiometer,...)	*XX*

Options shown in italics are only available on demand. Contact SKF for more information on minimum quantities and additional costs.

Accessories

	Designation	Order N°
Magnetic brake (1,4 Nm)	ZAC–1031,0219	M/0126957
Potentiometer (1 000 Ω)	ZAC–1063,0011	M/0126958
Encoder	ZAC–1063,0020	M/0126959

Linear actuator Magforce STG

Benefits

- Modular
- Robust
- Reliable
- High speed and/or high load
- All metal design



Dimensional drawing

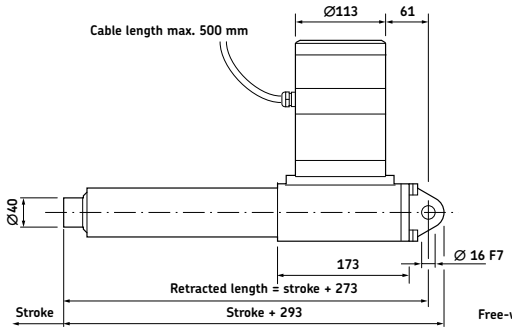

Side view

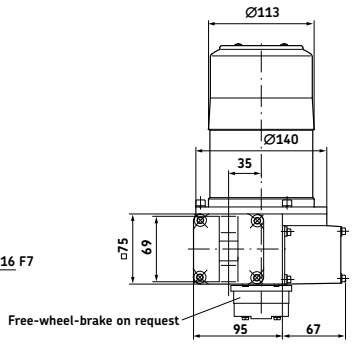

Rear view

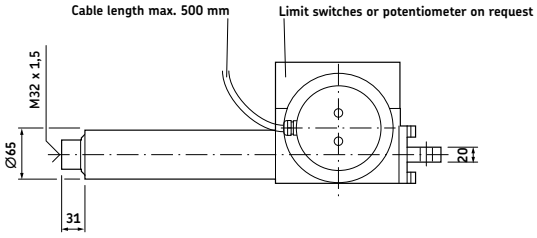

Top view

Connecting diagrams

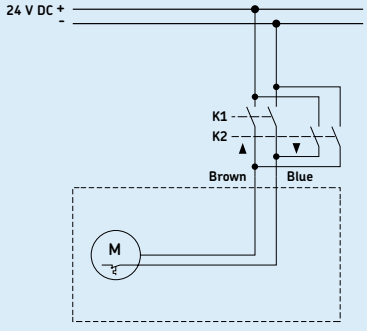

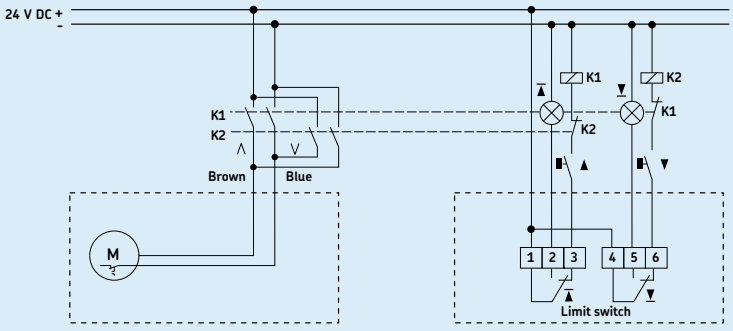

With optional limit switch

Technical data

	Unit	STG 10007	STG 12010	STG 15020	STG 15040
Rated push load	N	10 000	12 000	15 000	15 000
Rated pull load	N	10 000	12 000	15 000	15 000
Speed (at full load)	mm/s	14	11	5	3
Stroke	mm	100 to 700	100 to 700	100 to 700	100 to 700
Retracted length	mm	S+273	S+273	S+273	S+273
Voltage	V DC	24	24	24	24
Power consumption	W	840	840	768	528
Current consumption	A	35	35	32	22
Duty cycle	%	10 (1/9)	10 (1/9)	10 (1/9)	10 (1/9)
Ambient temperature	°C	–10 to +40	–10 to +40	–10 to +40	–10 to +40
Type of protection	IP	54	54	54	54
Weight (at 200 mm stroke)	kg	14,6	14,6	14,6	14,6
Color	–	Silver	Silver	Silver	Silver

Performance diagram

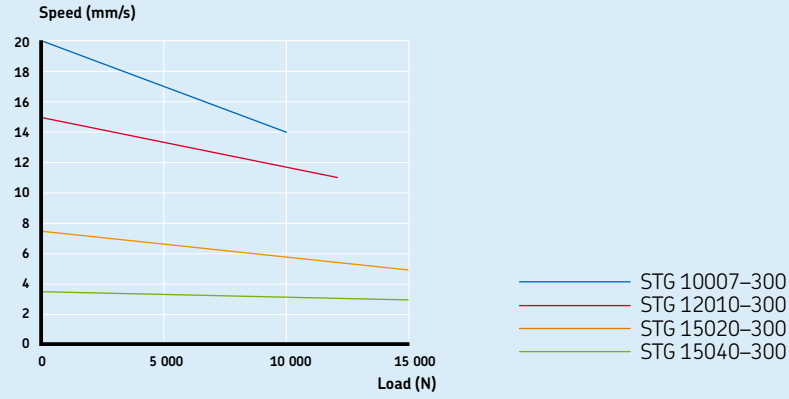

Speed-load diagram

Safety load factor conditions

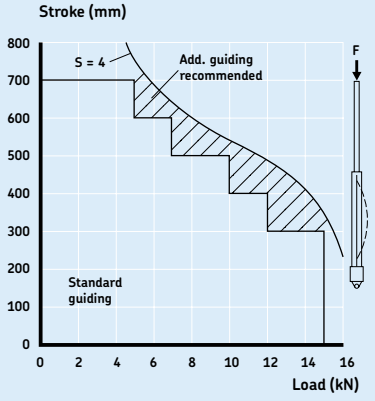

Bending of spindle S = safety factor Euler 3

Options

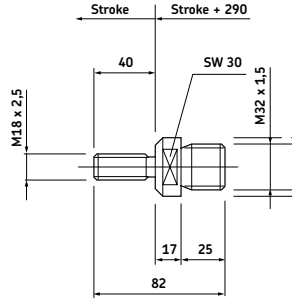

Adapter

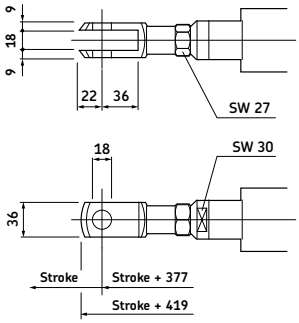

Fork head

Ordering key

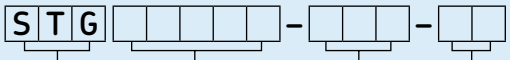

Type

Load :

10 000 N	10007
12 000 N	12010
15 000 N / 5 mm/s	15020
15 000 N / 3 mm/s	15040

Stroke (S):

100 mm	100
200 mm	200
300 mm	300
400 mm	400
500 mm	500
600 mm	600
700 mm	700

Customer option:

Standard	01
Others (brake, limit switch, extended motor shaft, encoder, potentiometer, ...)	*XX*

Options shown in italics are only available on demand. Contact SKF for more information on minimum quantities and additional costs.

Accessories

	Designation	Order N°
Adapter bolt	ZBE–1031,0106	M/0125265
Fork head	ZBE–1051,9038	M/0124705

Linear actuator Runner

Benefits

- High push/pull load
- Compact
- Back-up nut as standard
- High safety factor
- Silent operation



Suitable control units and accessories

Control units

	SCU 1	SCU 5	SCU 9	VCU 5	VCU 8	VCU 9	BCU 5	BCU 8
RU20, RU21, RU22	●	●	●	●	●	●	●	●
RU23, RU24, RU25	●	●	●	●	●	●		
EHA 3	●	●	●	●	●	●	●	●
STJ	●	●	●	●	●	●	●	●
STE	●	●	●	●	●	●	●	●

Hand switch
Foot switch
Desk switch

Connecting diagram

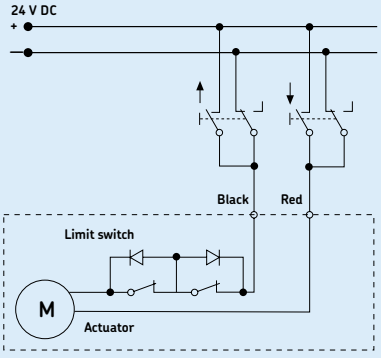

Dimensional drawing

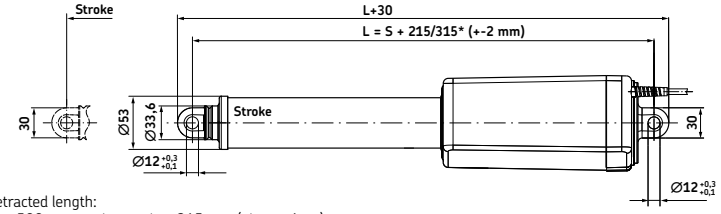

* Retracted length:
up to 500 mm stroke: stroke +215 mm (plus options)
from 500 mm stroke: stroke +315 mm (plus options)

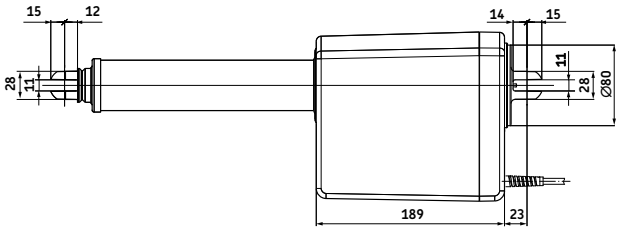

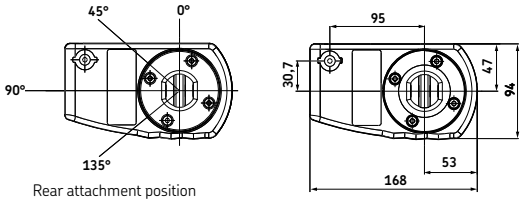

Rear attachment position

Legend:
S = stroke
L = retracted length

Technical data

	Unit	RU20	RU21	RU 22	RU23	RU24	RU25
Rated push load	N	8 000	10 000	12 000[1]	8 000	10 000	12 000[1]
Rated pull load	N	8 000	8 000	8 000	8 000	8 000	8 000
Speed (full load to no load)	mm/s	7 to 10	5 to 8	4 to 7	8 to 15	6 to 12	5 to 9
Stroke	mm	100 to 700	100 to 700	100 to 700	100 to 700	100 to 700	100 to 700
Retracted length	mm	S+215/315[2]	S+215/315[2]	S+215/315[2]	S+215/315[2]	S+215/315[2]	S+215/315[2]
Voltage	V DC	24	24	24	24	24	24
Power consumption	W	N/A	N/A	N/A	N/A	N/A	N/A
Current consumption	A	7	7	7	10	10	10
Duty cycle	%	10 (1/9)	10 (1/9)	10 (1/9)	10 (1/9)	10 (1/9)	10 (1/9)
Ambient temperature	°C	+10 to +40	+10 to +40	+10 to +40	+10 to +40	+10 to +40	+10 to +40
Type of protection	IP	×4/×6S	×4/×6S	×4/×6S	×4/×6S	×4/×6S	×4/×6S
Weight	kg	4,7	4,7	4,7	4,7	4,7	4,7
Color	–	Grey	Grey	Grey	Grey	Grey	Grey

[1] Safety working load for medical application is 10 000 N (EN 60601)
[2] S ≤ 500 mm; L = S + 215
S > 500 mm; L = S + 315

Performance diagrams

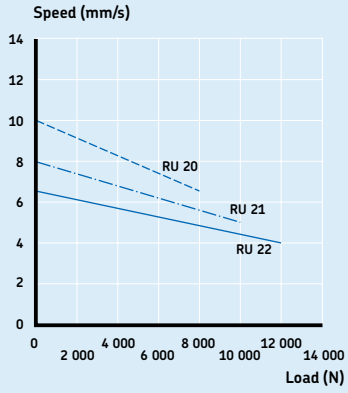

Speed-load diagram

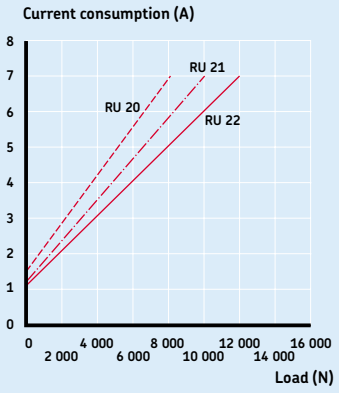

Current-load diagram

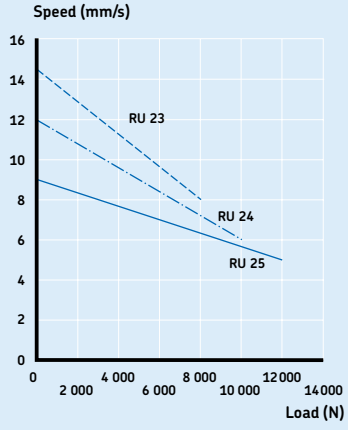

Speed-load diagram

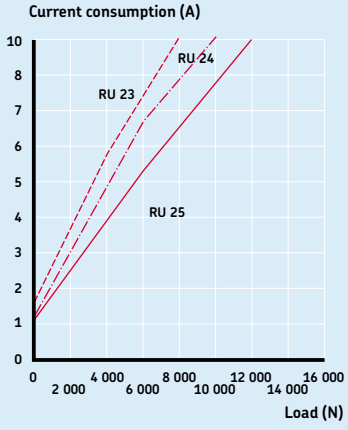

Current-load diagram

Safety factor load conditions

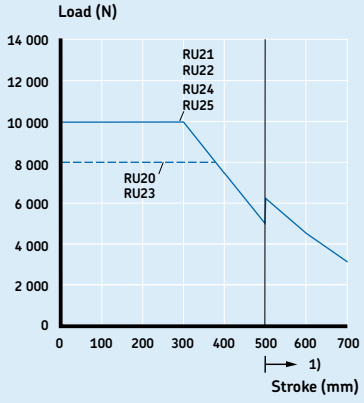

Push load limit, safety factor S=4 (EN 60601)
1) retracted length extension
at stroke >500 mm



Push load limit, safety factor S=2
1) retracted length extension
at stroke >500 mm

Ordering key

RU2 □ – □□□ □□□ □ □□ □ □ □ □ 00

Type

Voltage:
24 V DC

Load / Speed:

8 000 N / 7-10 mm/s	0
8 000 N / 8-15 mm/s	3
10 000 N / 5-8 mm/s	1
10 000 N / 6-12 mm/s	4
12 000 N / 4-7 mm/s	2
12 000 N / 5-9 mm/s	5

Stroke (S) / Retracted length (L):

50 mm / 315 mm	050315
100 mm / 315 mm	100315
150 mm / 365 mm	150365
200 mm / 415 mm	200415
250 mm / 465 mm	250465
300 mm / 515 mm	300515
350 mm / 565 mm	350565
400 mm / 615 mm	400615
450 mm / 665 mm	450665
500 mm / 715 mm	500715
550 mm / 865 mm	550865
600 mm / 915 mm	600915
650 mm / 965 mm	650965
700 mm / 1 015 mm	700 XXX
50<S≤500 mm / S+215	- - - - - -
500<S<700 mm / S+315	- - - - - -
S>700 mm (customized)	*XXXXXX*

Type of protection / Color:

IP×4S, grey	A
IP×6S, grey	B

Cable:

Straight cable, 1,5 m, DIN8 plug	15
Straight cable, 1,5 m, Jack plug 180°	*0D*

Rear attachment orientation / Hole diameter:

0° / ∅=12,0 mm	0
45° / ∅=12,0 mm	*2*
90° / ∅=12,0 mm	*4*
135° / ∅=12,0 mm	*6*

Option 1:

No option	0
Electrical anti-pinching (safety switch), pull load, L+20 mm	*K*
Electrical anti-pinching (safety switch), push load, L+20 mm	*L*

Option 2:

No option	0
2-Hall encoder, 14 pulses, DIN8 plug	A
Lifetime monitoring	M
2-Hall encoder, 14 pulses, DIN8 plug, lifetime monitoring	N

Option 3:

No option	–
Emergency lowering, L+53 mm	*V*

Options shown in italics are only available on demand. Contact SKF for more information on minimum quantities and additional costs.

Linear actuator Matrix 3

Benefits

- Silent operation
- Full system with control unit, operating switch and accessories
- Synchronization possible
- Compact and aesthetic
- Back-up nut as standard



Suitable control units and accessories

Control units

	SCU 1	SCU 5	SCU 9	VCU 5	VCU 8	VCU 9	BCU 5	BCU 8	MCU
MAX 3	●	●	●	●	●	●	●	●	●
EHA1									●
EHA3	●	●	●	●	●	●	●	●	
STJ	●	●	●	●	●	●	●	●	
STA									●
STE	●	●	●	●	●	●	●	●	

Hand switch
Foot switch
Desk switch

Connecting diagram*

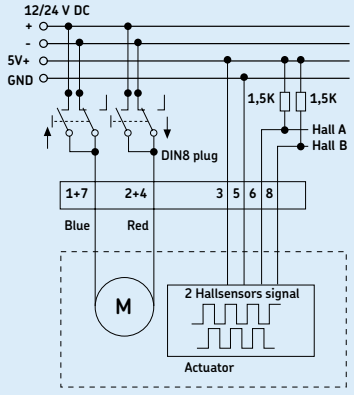

* Only valid for MAX 31. MAX 30 must be operated by a BCU, MCU, SCU or VCU control unit.

Dimensional drawing

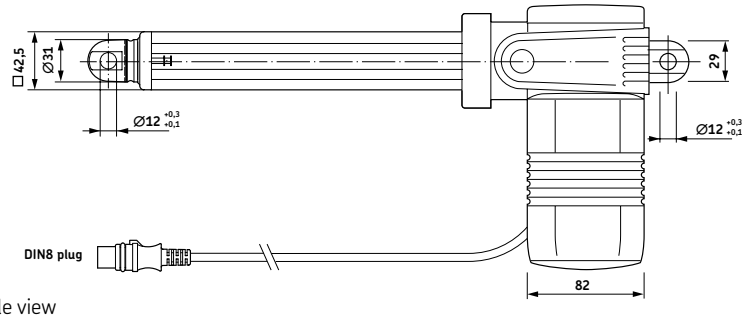

Side view

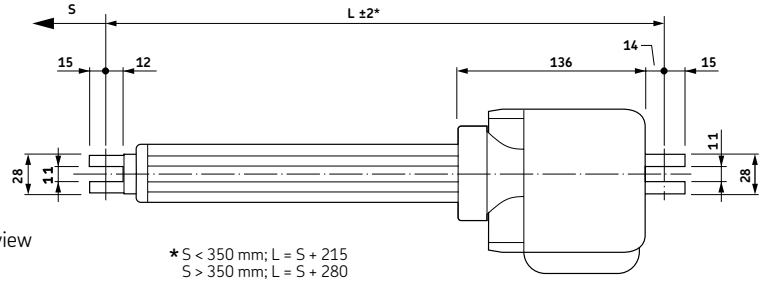

Top view

* S < 350 mm; L = S + 215
S > 350 mm; L = S + 280

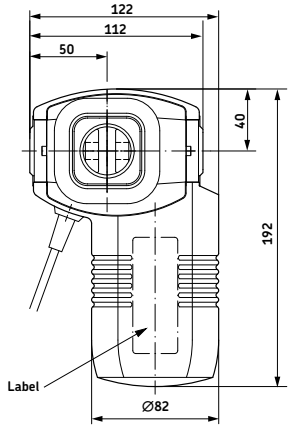

Rear view

Rear attachment position
Standard 0°

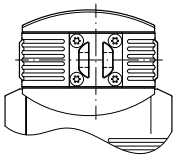

Turned 90°

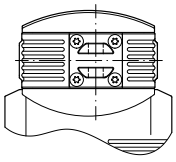

Technical data

	Unit	MAX 3..A..	MAX 3..B..	MAX 3..C..
Rated push load	N	8 000	4 000	3 000
Rated pull load	N	6 000[1)]	4 000	3 000
Speed (full load to no load)	mm/s	5 to 7	6 to 9	12,7 to 18
Stroke	mm	50 to 700	50 to 700	50 to 700
Retracted length	mm	S + 215/280[2)]	S + 215/280[2)]	S + 215/280[2)]
Voltage	V DC	12 or 24	12 or 24	12 or 24
Power consumption	W	120	120	120
Current consumption	A	5,0	5,0	5,0
Duty cycle	%	10 (1/9)	10 (1/9)	10 (1/9)
Ambient temperature	°C	0 to +40	0 to +40	0 to +40
Type of protection	IP	66S	66S	66S
Weight (at 200 mm stroke)	kg	4,5	4,2	4,0
Color	–	Grey	Grey	Grey

[1)] Max load for medical application is 5 000 N
[2)] S ≤ 350 mm; L = S + 215
S > 350 mm; L = S + 280

Performance diagrams

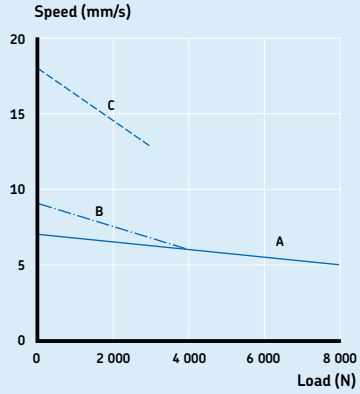

Speed-load diagram

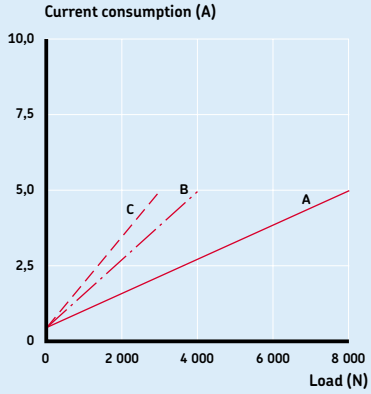

Current-load diagram

Safety factor load conditions

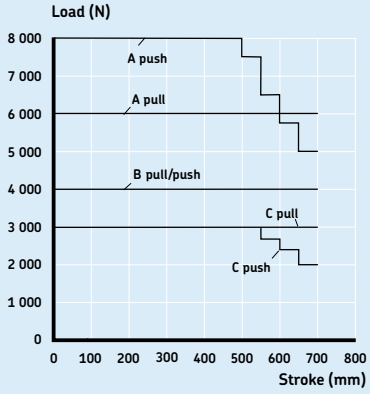

Push load reduction static
Safety factor S=1

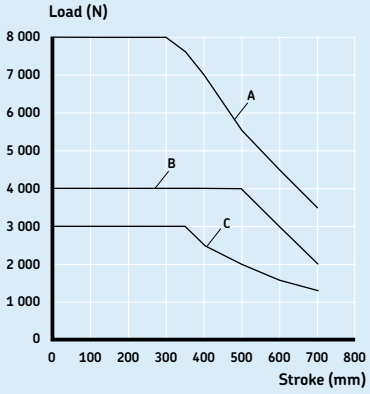

Push load reduction static
Safety factor S=2

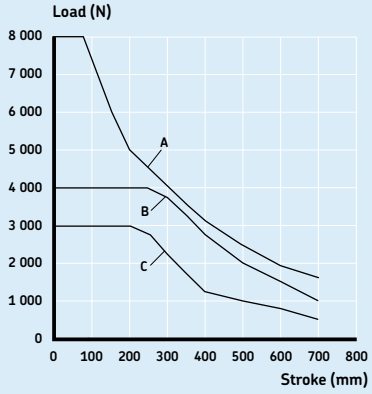

Push load reduction static
Safety factor S=4 (EN60601)

Ordering key

MAX3 ☐ – ☐ ☐☐☐ ☐☐☐ A ☐☐ ☐ ☐ ☐ ☐ 000

Type

Voltage:

24 V DC	0
24 V DC with integrated current cut-off	*1*
12 V DC	*2*

Load:

8 000 N	A
4 000 N	B
3 000 N	C

Stroke (S):

50 mm	050 265
100 mm	100 315
150 mm	150 365
200 mm	200 415
250 mm	250 465
300 mm	300 515
350 mm	350 565
400 mm	400 680
450 mm	450 730
500 mm	500 780
550 mm	550 830
600 mm	600 880
650 mm	650 930
700 mm	700 980
Other stroke lengths; 50<S<700 mm	--- ---

Cable / Connecting plug:

Coiled, 0,75 m (not stretched) / DIN8 plug	*0B*
Straight, 2,5 m / DIN8 plug	C5
Special cable length on request	--

Orientation of rear attachment:

No fork head (customized option)	0
Standard (as drawing)	1
Turned 90°	*2*

Option 1:

No option, only valid for actuator "A" (push and pull)	0
Quick-release +EKZm, push, fork head bore parallel to button (for actuator design "C" is L= +115 mm)*	E
*Quick-release +EKZm, push, fork head bore 90° to button (for actuator design "C" is L= +115 mm)**	*F*
Electrical anti-pinching protection, motor direction pull	K
Electrical anti-pinching protection, motor direction push	L
Push load, for actuator version "B" and "C"	M
Pull load, for actuator version "B" and "C"	N

EKZm: mechanical anti-pinching *min. stroke 150 mm up to 300 mm

Option 2:

No option	0
2-Hall encoder, DIN8 plug	F
Lifetime monitoring	*M*
Lifetime monitoring, 2-Hall encoder, DIN8 plug	*P*

Option 3:

No option	–
Emergency lowering, fork head bore parallel to clamping lever (for actuator design "A", L+30 mm)	V
Emergency lowering, fork head bore 90° to clamping lever (for actuator design "A", L+30 mm)	*W*

Options shown in italics are only available on demand. Contact SKF for more information on minimum quantities and additional costs.

Linear actuator CAR 40

Benefits

- Industrial reliable and robust actuator
- Wide range of components
- Right- and left-hand version



Suitable control units and accessories

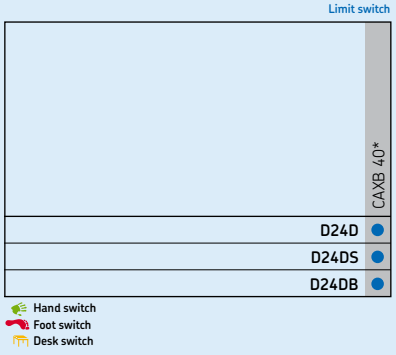

* See page 379

Connecting diagram

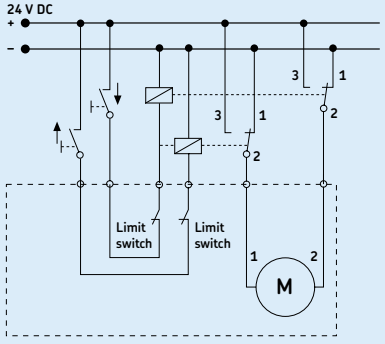

Dimensional drawing

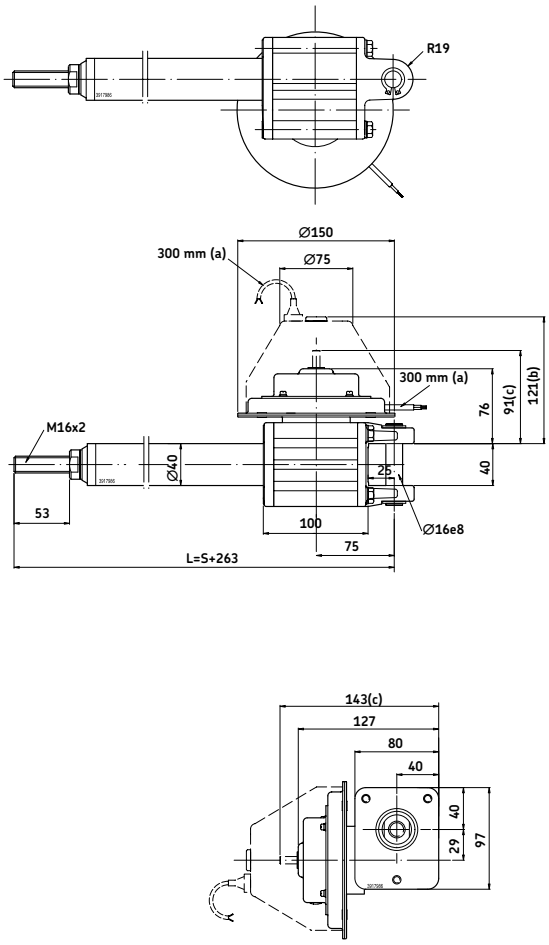

Legend:
S = stroke
L = retracted length
(a) = cable length
(b) = cover for brake (D24CB)
(c) = extended shaft (D24CS)

Technical data

	Unit	CAR 40
Rated push load	N	2 000 to 6 000
Rated pull load	N	2 000 to 6 000
Speed (full load to no load)	mm/s	10 to 60
Stroke	mm	100 to 700
Retracted length	mm	S+263
Voltage	V DC	24
Power consumption	W	N/A
Current consumption	A	16
Duty cycle	%	25
Ambient temperature	°C	–20 to +70
Type of protection	IP	20/44
Weight	kg	5,8 to 8,4

Performance diagrams

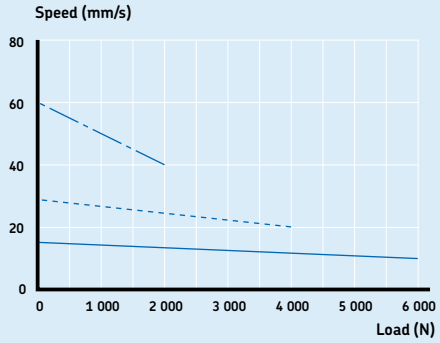

Speed-load diagram CAR 40 ... 24 V DC

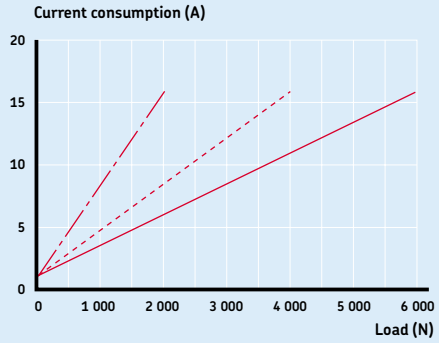

Current-load diagram CAR 40 ... 24 V DC

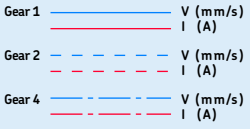

Duty cycle

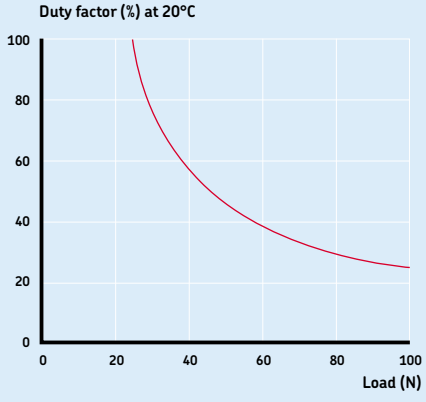

Ordering key

Dynamic load (N) / Speed (mm/s)			Motor options	
6 000/xx 6 000/15-10 6 000/15-10 6 000/15-10	4 000/xx 4 000/30-20 4 000/30-20 4 000/30-20	2 000/xx 2 000/60-40 2 000/60-40 2 000/60-40	No motor 24 V DC, flat motor, IP44 24 V DC, flat motor, extended shaft, IP44 24 V DC, flat motor, brake, IP20	0000 D24D D24DS D24DB
1	**2**	**4**		

C A R [ ] 4 0 X [ ] [ ] [ ] X [ ] [ ] / [ ] [ ] [ ] [ ] [ ] [ ]

Type

Motor assembly:

Right	R
Left	L

Stroke (S):

100 mm	100
300 mm	300
500 mm	500
700 mm	700
Other stroke lengths	---

Option:

Friction clutch	F
Back-up nut	S

Options shown in italics are only available on demand. Contact SKF for more information on minimum quantities and additional costs.

Linear actuator Ecomag

Benefits

- Compact
- Cost effective
- Silent operation
- Control unit can be mounted to the actuator



Suitable control units and accessories

Control units

	SCU 1	SCU 5	SCU 9	VCU 5	VCU 8	VCU 9	BCU 5	BCU 8	MCU
ECOMAG	●	●	●	●	●	●	●	●	●
EHA 1									●
EHA 3	●	●	●	●	●	●	●	●	
STJ	●	●	●	●	●	●	●	●	
STA									●
STE	●	●	●	●	●	●	●	●	

Hand switch
Foot switch
Desk switch

Connecting diagram

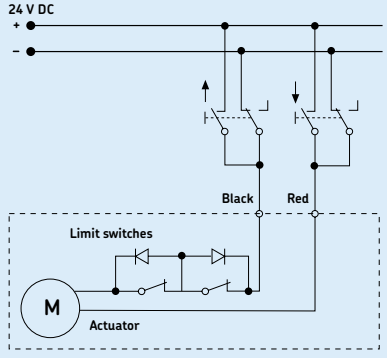

Dimensional drawing

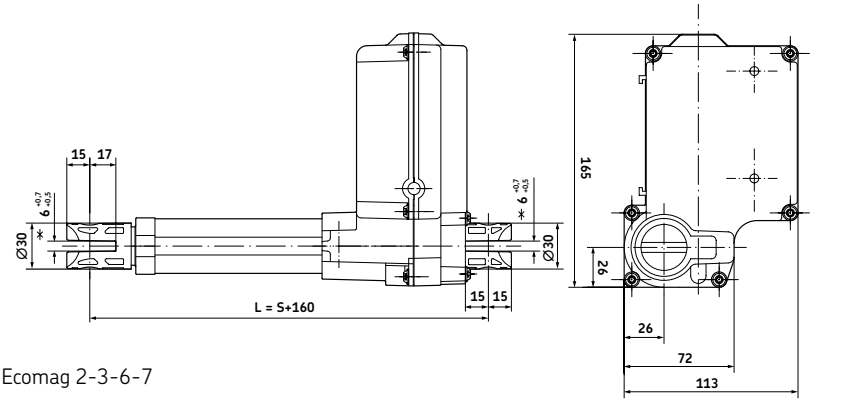

Ecomag 2-3-6-7

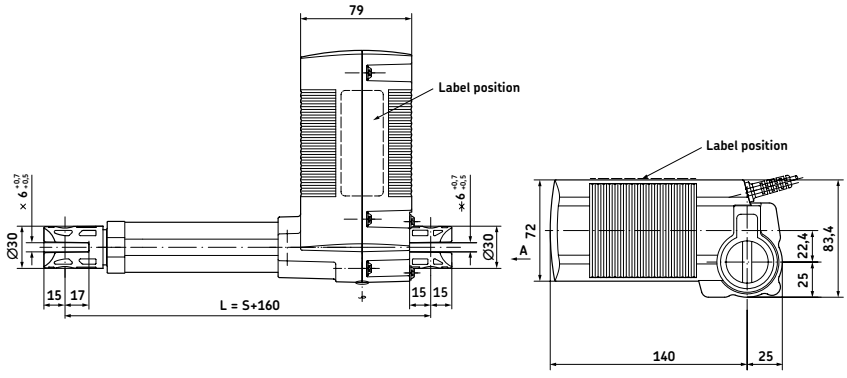

Ecomag 4-5-8-9

Rear attachment position

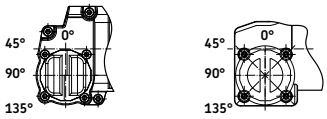

Push version only

Push and pull version

Legend:
S = stroke
L = retracted length

Technical data

	Unit	ECO 20/40	ECO 60/80	ECO 30/50	ECO 70/90
Rated push load	N	2 000	6 000	2 000	6 000
Rated pull load	N	0	0	2 000	4 000
Speed (full load to no load)	mm/s	9 to 13	4 to 7	9 to 13	4 to 7
Stroke	mm	50 to 300	50 to 300	50 to 300	50 to 300
Retracted length	mm	S+160	S+160	S+160	S+160
Voltage	V DC	24	24	24	24
Power consumption	W	70	120	70	120
Current consumption	A	3	5	3	5
Duty cycle	%	10 (1/9)	10 (1/9)	10 (1/9)	10 (1/9)
Ambient temperature	°C	+10 to +40	+10 to +40	+10 to +40	+10 to +40
Type of protection	IP	×4S	×4S	×4S	×4S
Weight	kg	2,1	2,1	2,5	2,5
Color	–	Black or grey	Black or grey	Black or grey	Black or grey

Performance diagrams

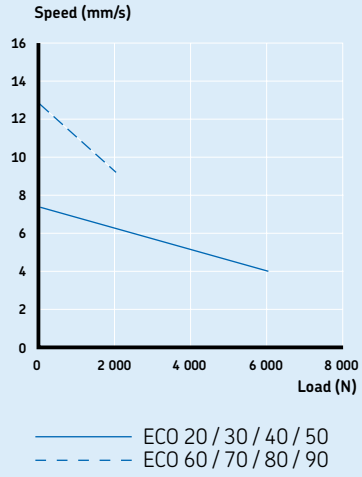

Speed-load diagram

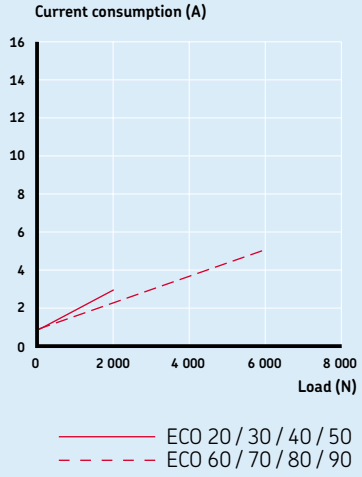

Current-load diagram

Safety factor load conditions

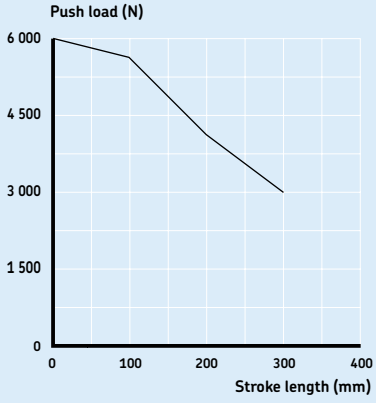

Push load reduction
Safety factor=4

Ordering key

E C 0 □ □ – □ □ □ □ □ □ □ □ – 0 0 0

Type

Load /Housing:

Push	Pull	Housing	
2 000 N	0	Large	2
2 000 N	2 000 N	Large	3
2 000 N	0	Small	4
2 000 N	2 000 N	Small	5
6 000 N	0	Large	6
6 000 N	4 000 N	Large	7
6 000 N	0	Small	8
6 000 N	4 000 N	Small	9

Encoder:

No encoder, coiled cable, 2-pin Minifit plug or customization	*0*
No encoder, coiled cable , DIN8 plug or customization	9
2-Hall encoder, 8 pulses, straight cable, DIN8 plug (small housing only)	F

Current cut-off:

No	0
Yes (not available for ECO4.-/ECO5.-/ECO8.-/ECO9.-)	*1*

Stroke (S):

50 mm	05
100 mm	10
150 mm	15
200 mm	20
250 mm	25
300 mm	30
Other stroke lengths; 50<S<300 mm	*00*

Front attachment (groove depth 17 mm):

Hole, ∅=12 mm, groove width 10 mm	M
Customized	*X*

Rear attachment (groove depth 15 mm):

Hole, ∅=12 mm, groove width 10 mm	M
Customized	*X*

Orientation of rear attachment:

0°	1
45°	*3*
90°	*5*
135°	*7*

Color:

Black	A
Grey	B

Option:

No option	0
Back-up nut (available only for drives with 6 kN, mandatory for UL 2601) – only for ECO 7/9, L = +23 mm	A
FOR ECO3,-/ECO5.-ONLY (no back-up nut)	
Quick-release, push load, fork head bore parallel to lever, L = +40 mm, integrated anti-pinching protection.	B
Quick-release, push load, bore 90° to lever, L = +40 mm, integrated anti-pinching protection.	C
Quick-release, pull load, fork head bore parallel to lever, L = +40 mm, integrated anti-pinching protection.	F
Quick-release, pull load, fork head bore 90° to lever, L = +40 mm, integrated anti-pinching protection.	G
Mechanical anti-pinching protection pull, motor direction push, L = +13 mm.	K
Mechanical anti-pinching protection push, motor direction pull, L = +13 mm.	L

Options shown in italics are only available on demand. Contact SKF for more information on minimum quantities and additional costs.

Linear actuator FD series

Benefits

- Cost-effective actuator
- Hall effect sensors for feedback
- Rear clevis can be turned per step of 30°
- Built-in limit switches (factory pre-set)
- UL 1004 certification



Suitable control units and accessories

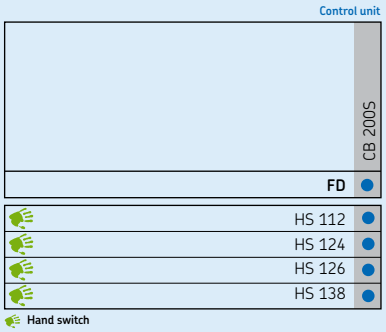

Connecting diagram

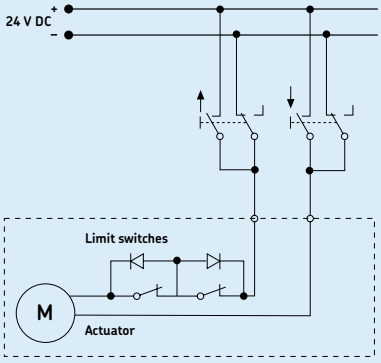

Dimensional drawing

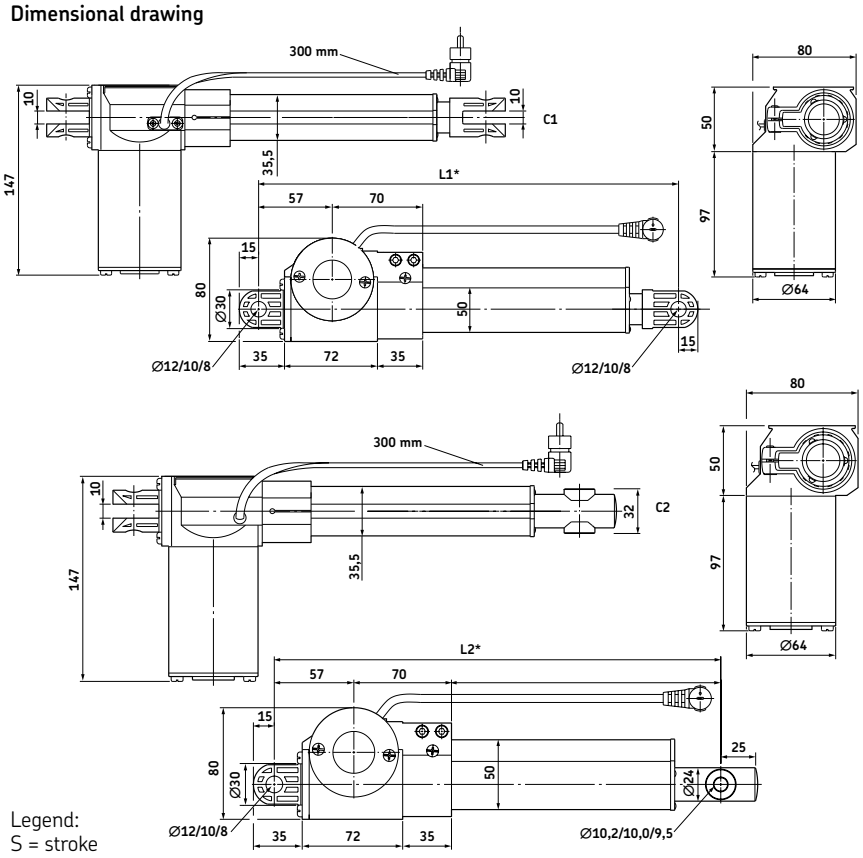

Legend:
S = stroke
L = retracted length

Stroke (mm)	50	100	150	200	250	300
Retracted length (L1)	250	300	360	410	470	520
Retracted length (L2)	210	260	320	370	430	480

Technical data

	Unit	FD A1	FD A2
Rated push load	N	6 000	3 000
Rated pull load	N	4 000	2 000
Speed (full load to no load)	mm/s	2,67 to 4,2	6,2 to 8,2
Stroke	mm	50 to 300	50 to 300
Retracted length	mm	–*	–*
Voltage	V DC	24	24
Power consumption	W	72	60
Current consumption	A	3	2,5
Duty cycle	%	10	10
Ambient temperature	°C	+10 to +40	+10 to +40
Type of protection	IP	52	52
Weight (at 300 mm stroke)	kg	2,5	2,5
Color	–	Black	Black

* See above table

Performance diagrams

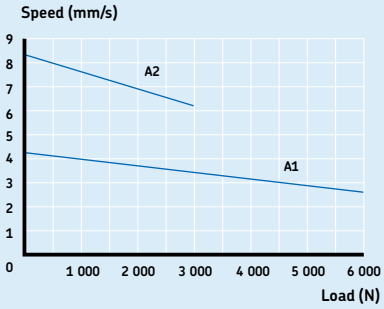

Speed-load diagram

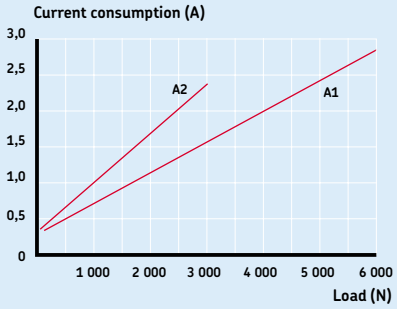

Current-load diagram

Ordering key

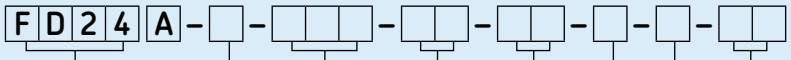

Type

Load:

6 000 N	1
3 000 N	2

Stroke:

50 mm	050
100 mm	100
150 mm	150
200 mm	200
250 mm	250
300 mm	300
Other stroke lengths; 50<S<300 mm	*XXX*

Front attachment:

Plastic, ∅= 8,0, 10,0, or 12,0 mm	C1
Metal, ∅=9,5, 10,0 or 10,2 mm	C2

Option 1:

Hall effect sensor (resolution pulses/mm; A1=10, A2=5)	HS

Option 2:

Connector for CB200S	0
No connector, open wires	N
Customized connector	*C*

Option 3 (front attachment):

Attachment type C1 ∅=12,0 mm; type C2 ∅=10,2 mm	1
Attachment type C1 and C2 ∅=10,0 mm	2
Attachment type C1 ∅=8,0 mm; type C2 ∅=9,5 mm	3

Customized cable length options:

Specify requested cable length in dm	XX

Options shown in italics are only available on demand. Contact SKF for more information on minimum quantities and additional costs.

Linear actuator Magdrive

Benefits

- Slim design
- Aluminium profile
- In-line actuator
- Quiet operation
- High push load



Suitable control units and accessories

Control unit

	SCU 1	SCU 5	SCU 9	VCU 5	VCU 8	VCU 9	BCU 5	BCU 8
MAGDRIVE	●	●	●	●	●	●	●	●
EHA 3	●	●	●	●	●	●	●	●
STJ	●	●	●	●	●	●	●	●
STE	●	●	●	●	●	●	●	●

Hand switch
Foot switch
Desk switch

Connecting diagram

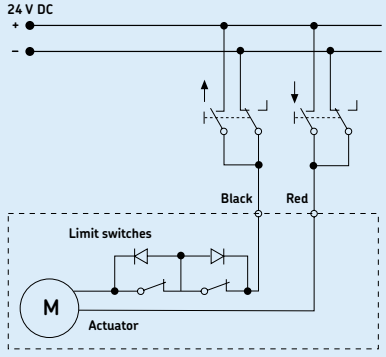

Dimensional drawing

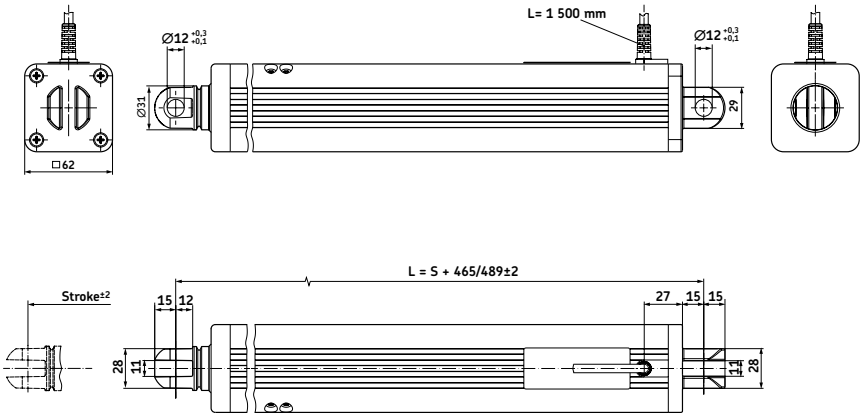

Plastic bushing for forkhead
(hinge delivered separately)

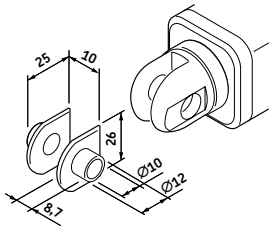

Orientation of
rear attachment

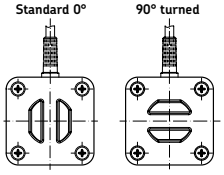

Legend:
S = stroke
L = retracted length

Technical data

	Unit	MD22/MD24	MD23/MD25
Rated push load	N	6 000	6 000
Rated pull load	N	200* (static only)	6 000
Speed (full load to no load)	mm/s	8,5 to 15	8,5 to 15
Stroke	mm	50 to 700	50 to 700
Retracted length	mm	S+465	S+489
Voltage	V DC	24	24
Power consumption	W	N/A	N/A
Current consumption	A	7	7
Duty cycle	%	10 (1/9)	10 (1/9)
Ambient temperature	°C	+10 to +40	+10 to +40
Type of protection	IP	×0/×4S	×0/×4S
Weight	kg	5,0	5,0
Color	–	Colorless anodized	Colorless anodized

Performance diagrams

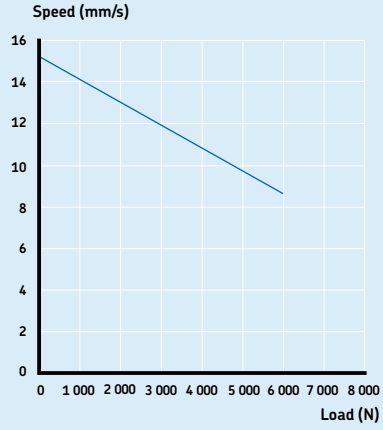

Speed-load diagram

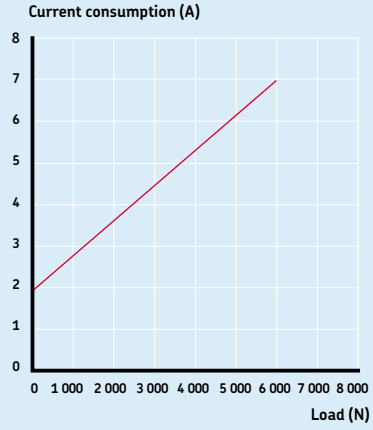

Current-load diagram

Safety factor load conditions

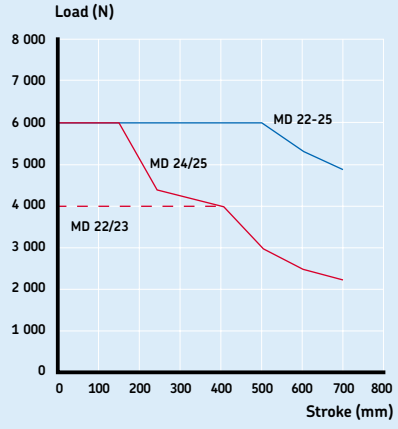

Push load diagram
Safety factor S=2
Safety factor according UL60601–1, IEC60601–1

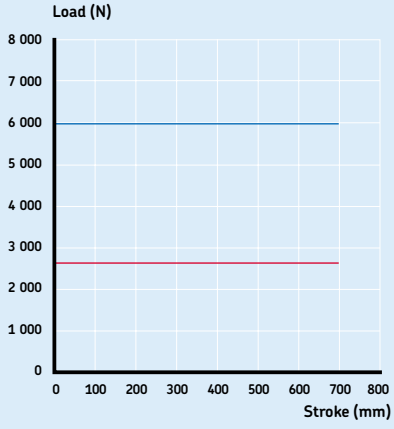

Pull load diagram MD23
Safety factor S=4
Safety factor according UL60601–1, IEC60601–1

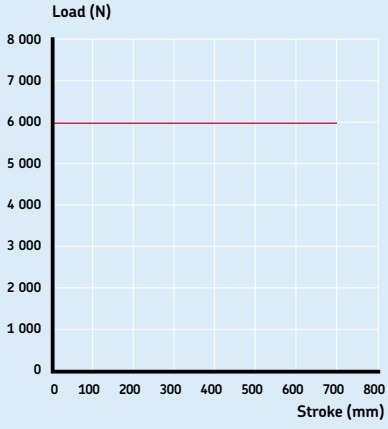

Pull load diagram MD25 (6 000 N)
Safety factor according UL60601–1, IEC60601–1

Ordering key

MD2 □ – □□□ □□□ □ □□ □ □ □ □ 00

Type

Push/pull force:

6 000 N/200 N	2
6 000 N/6 000 N	3
6 000 N/200 N (recommended for medical applications- with alu. rear hinge)	4
6 000 N/6 000 N (recommended for medical applications- with alu. rear hinge)	5

Stroke:

50 mm	050
100 mm	100
150 mm	150
200 mm	200
250 mm	250
300 mm	300
350 mm	350
400 mm	400
450 mm	450
500 mm	500
550 mm	550
600 mm	600
650 mm	650
700 mm	700
Other stroke lengths	___

Retracted length:

MD22/24: S+465 mm	___
MD23/25: S+489 mm	___
Over 1 000 mm assembly length, use customer specific adaption	XXX
Others	___

Type of protection:

IPX0	A
IPX4S	B

Motor cable:

Straight, 1,5 m, DIN8 plug	15
Straight, 1,5m, jack plug 180°	*OD*

Rear attachment / Hole diameter:

Standard 0° / ∅12 mm	0
Rotated 90° / ∅12 mm	4

Option 1:

No option	0
Electrical anti-pinching protection, safety switch, motor direction push	L
Electrical anti-pinching protection, safety switch, motor direction pull	K

Option 2:

No option	0
2-Hall encoder (only available with DIN8 plug) 2,15 impulse per turn/sensor (= 5,375 imp. per 1 mm.)	*F*

Option 3:

No option	–
Emergency lowering fork head bore (add 30 mm to retracted length "L")	V

Options shown in italics are only available on demand. Contact SKF for more information on minimum quantities and additional costs.

Linear actuator CAHB–21 series

Benefits

- High efficiency ball screw
- Extension tube (stainless steel)
- Protection tube (steel)
- Enhanced corrosion resistance
- Mechanical overload protection (clutch)
- Lubricated for service life
- Robust, designed for tough environment
- No back driving
- Certified (CE: EN 55011)



Connecting diagram

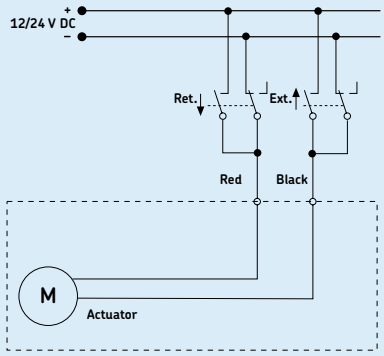

Different rear attachment

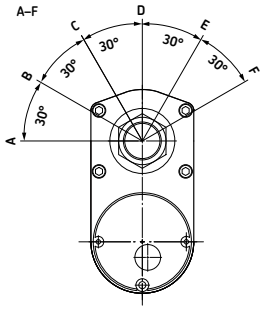

Dimensional drawing

Basic configuration (dashed line for optional limit switch)

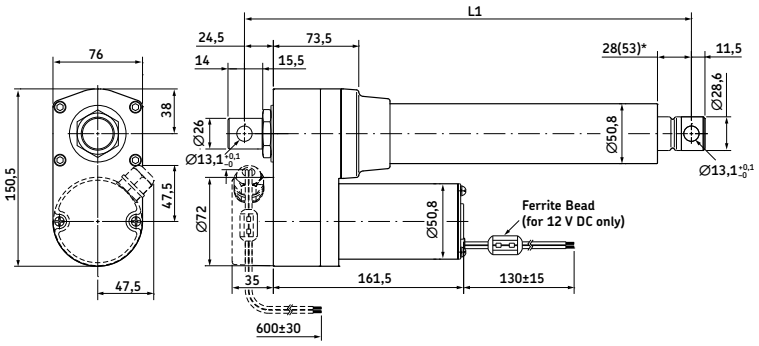

Without limit swicth:
RED (+) & BLACK (–) = retraction
RED (–) & BLACK (+) = extension
With limit switch:
RED (+) & BLACK (–) = extension
RED (–) & BLACK (+) = retraction

Legend:
L1 = retracted length
* 53 = dimension with limit switch

	With limit switch[1]						Without limit switch[2]					
Stroke (mm)	**102**	**153**	**204**	**305**	**457**	**610**	**102**	**153**	**204**	**305**	**457**	**610**
L1 Retracted length	393	444	495	659	811	964	317	368	419	521	735	888

[1] Tolerance: S and L1 = ± 5,0 mm (If S≥305 mm, S = ± 7,5 mm)

[2] Tolerance: S = ± 2,5 mm and L1 = ± 3,8 mm

Technical data

		Unit	CAHB–21... 1	CAHB–21... 2	CAHB–21... 3
Rated push load		N	2 300	3 500	4 500
Rated pull load		N	2 300	3 500	4 500
Speed (full load to no load)		mm/s	45 to 65	24 to 36	14 to 19
Stroke		mm	102 to 610	102 to 610	102 to 610
Retracted length		mm	–*	–*	–*
Voltage		V DC	12 or 24	12 or 24	12 or 24
Power consumption		W	N/A	N/A	N/A
Current consumption	12 V DC	A	22	17	13
	24 V DC	A	11	8,5	6,5
Duty cycle		%	25	25	25
Ambient temperature		°C	–40 to +85	–40 to +85	–40 to +85
Type of protection		IP	66	66	66
Weight (at 305 mm stroke)		kg	6,5	6,5	6,5
Color		–	Black	Black	Black

* see above table

Performance diagrams

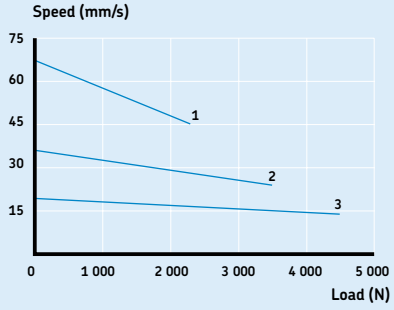

Speed-load diagram

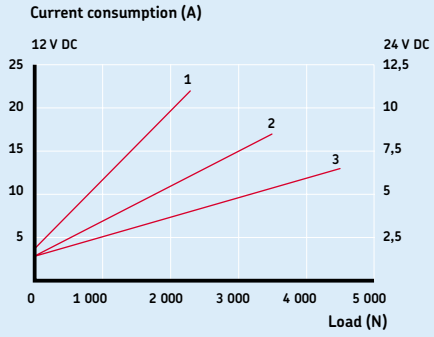

Current-load diagram

Dimensional drawing

Optional potentiometer (dashed line for optional limit switch)

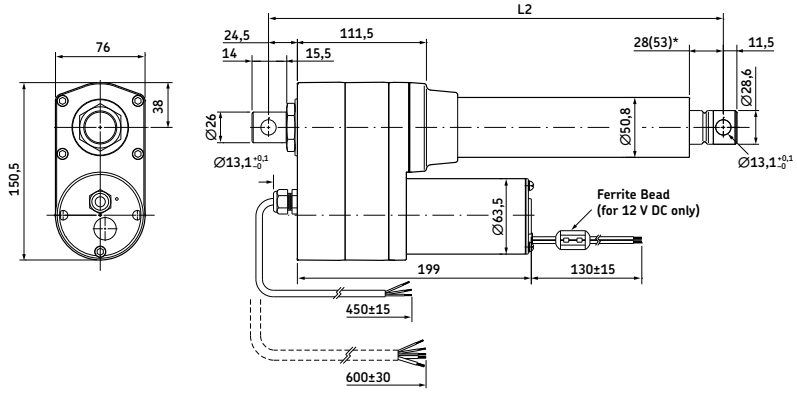

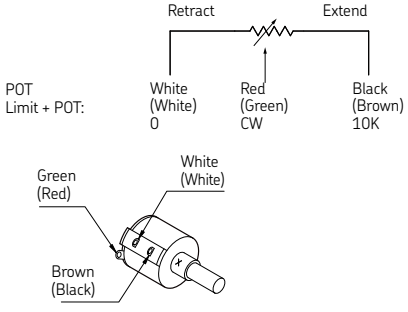

Legend:
L2 = retracted length
* 53 = dimension with limit switch

Without limit swicth:
RED (+) & BLACK (–) = retraction
RED (–) & BLACK (+) = extension

With limit switch:
RED (+) & BLACK (–) = extension
RED (–) & BLACK (+) = retraction

	With limit switch[1]						Without limit switch[2]					
Stroke (mm)	**102**	**153**	**204**	**305**	**457**	**610**	**102**	**153**	**204**	**305**	**457**	**610**
L2 Retracted length	431	482	533	697	849	1 002	355	406	457	559	773	926

[1] Tolerance: S and L2 = ± 5,0 mm (If S≥ 305 mm, S = ± 7,5 mm)

[2] Tolerance: S = ± 2,5 mm and L2 = ± 3,8 mm

Potentiometer resolution

Stroke (mm)	**102**	**153**	**204**	**305**	**457**	**610**
Ohm/mm	59,0	59,0	29,5	29,5	9,84	9,84

Ordering key

CAHB–21–□□N–□□□ □□□–A□□□□□–000

Type

Voltage:
12 V DC A
24 V DC B

Load:
2 300 N 1
3 500 N 2
4 500 N 3

Screw:
Ball screw N

Stroke:

102 mm	102
153 mm	153
204 mm	204
305 mm	305
457 mm	457
610 mm	610

Retracted length:

Stroke		
with L.S.[1]	w/o POT[2]	with POT[2]
102 mm	393 mm	431 mm
153 mm	444 mm	482 mm
204 mm	495 mm	533 mm
305 mm	659 mm	697 mm
457 mm	811mm	849 mm
610 mm	964 mm	A02 mm (1 002 mm)
w/o L.S.[1]		
102 mm	317mm	355 mm
153 mm	368 mm	406 mm
204 mm	419 mm	457 mm
305 mm	521 mm	559 mm
457 mm	735 mm	773 mm
610 mm	888 mm	926 mm

IP:
Standard (IP 66) A

Front attachment:
Standard (hole: ∅ 13,1 mm) A
Customized *X*

Rear attachment:
Standard (0° and hole: ∅ 13,1 mm) A
30° B
60° C
90° D
120° E
150° F
Customized *X*

Option 1:
None 0
Limit switch (only for load version 4 500 N) L

Option 2:
None 0
Potentiometer P

Option 3:
None 0
Thermal protection T

Options shown in italics are only available on demand. Contact SKF for more information on minimum quantities and additional costs.

[1] L.S.= Limit Switch
[2] POT= Potentiometer

Linear actuator Magforce ASM

Benefits

- Modular
- Robust
- Reliable
- High speed and/or high load
- All metal design



Connecting diagram

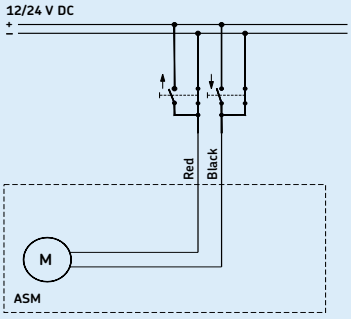

Dimensional drawing

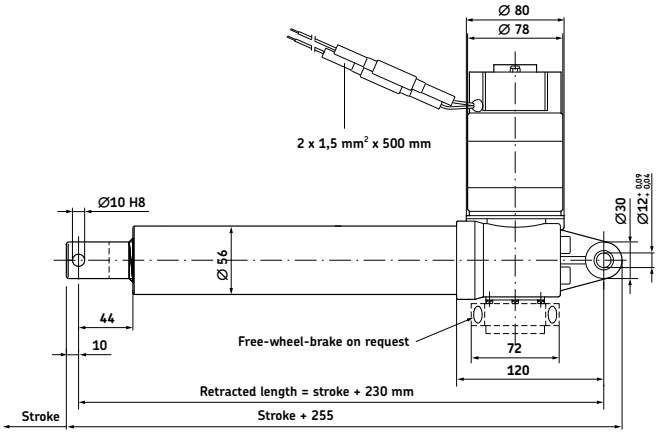

Side view

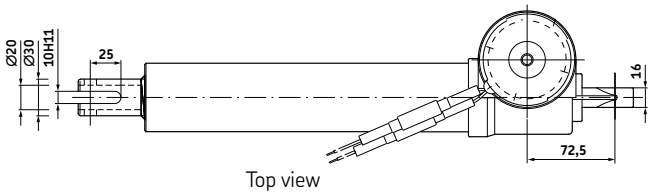

Top view

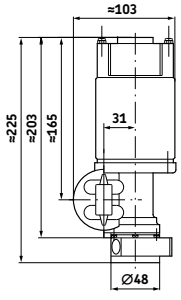

Rear view

Technical data

		Unit	ASM 1010	ASM 2030	ASM 3030	ASM 4050
Rated push load		N	1 000	2 000[1]	3 000[2]	4 000[3]
Rated pull load		N	1 000	2 000	3 000	4 000
Speed (at full load)	12 V DC	mm/s	50	17	8	5
	24 V DC	mm/s	45	18	8	5
Stroke		mm	100 to 700	100 to 700	100 to 700	100 to 700
Retracted length		mm	S+230	S+230	S+230	S+230
Voltage		V DC	12 or 24	12 or 24	12 or 24	12 or 24
Power consumption	12 V DC	W	192	168	168	168
	24 V DC	W	192	144	168	168
Current consumption	12 V DC	A	16	14	14	14
	24 V DC	A	8	6	7	7
Duty cycle		%	10 (1/9)	10 (1/9)	10 (1/9)	10 (1/9)
Ambient temperature		°C	–10 to +40	–10 to +40	–10 to +40	–10 to +40
Type of protection		IP	44	44	44	44
Weight		kg	5	5	5	5
Color		–	Silver	Silver	Silver	Silver

[1] Push load allowed up to 600 mm stroke (if S>600 mm, only pull load is allowed)
[2] Push load allowed up to 450 mm stroke (if S>450 mm, only pull load is allowed)
[3] Push load allowed up to 400 mm stroke (if S>400 mm, only pull load is allowed)

Performance diagrams

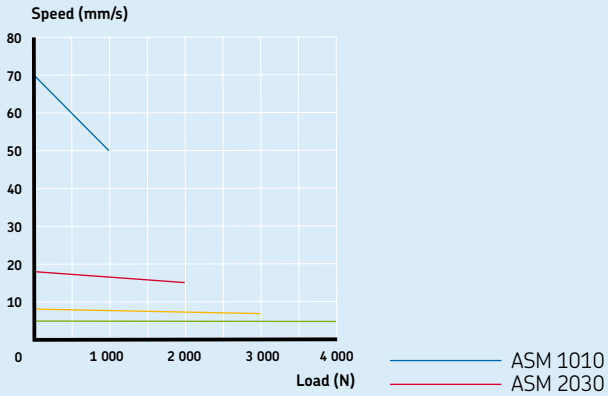

Speed-load diagram at 12 V DC

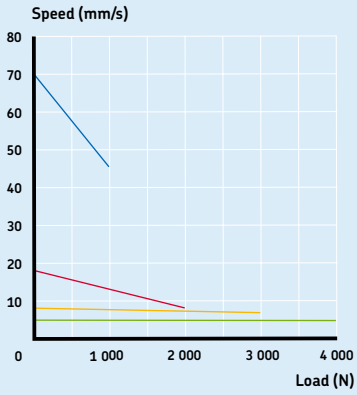

Speed-load diagram at 24 V DC

Safety factor load conditions

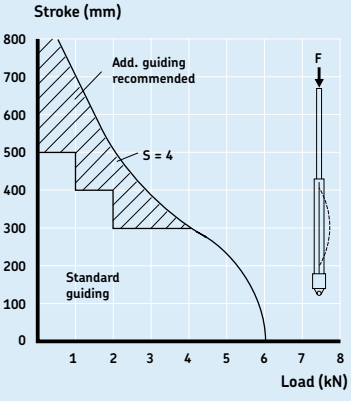

Bending of spindle
S = safety factor Euler 3

Ordering key

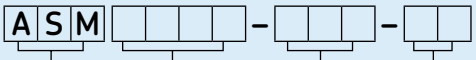

Type

Load:

1 000 N	1010
2 000 N	2030
3 000 N	3030
4 000 N	4050

Stroke (S):

100 mm	100
200 mm	200
300 mm	300
400 mm	400
500 mm	500
600 mm	600
700 mm	700

Customer option:

12 V DC, standard	01
24 V DC	02
24 V DC, additional bushing (L=S+280 mm)	*05*
24 V DC, bronze nut, special grease for -30°C	*07*
24 V DC, protection tube made out of stainless steel	*12*
24 V DC, extended shaft	*16*
12 V DC, additional bushing (L=S+280 mm)	*19*
Others (rear attachment hole turned 90°, motor turned 90°, potentiometer...)	*XX*

Options shown in italics are only available on demand. Contact SKF for more information on minimum quantities and additional costs.

Accessories

	Designation	Order N°
Free wheel brake on push load	ZAC–1028,6226	M/0124682
Free wheel brake on pull load	ZAC–1028,0002	M/0125632
Friction brake for pull/push load	ZAC–1028,7851	M/0124683
Limit switch 100 mm stroke	ZAC–1043,0210–0100	M/0126970
Limit switch 200 mm stroke	ZAC–1043,0210–0200	M/0126971
Limit switch 300 mm stroke	ZAC–1043,0210–0300	M/0126972
Limit switch 400 mm stroke	ZAC–1043,0210–0400	M/0126973
Limit switch 500 mm stroke	ZAC–1043,0210–0500	M/0126974
Limit switch 600 mm stroke	ZAC–1043,0210–0600	M/0126975

Linear actuator CAP 43B

Benefits

- Robust and reliable
- Long lifetime
- Wide range of components
- Right- and left- version
- Analogical feedback



Suitable control units and accessories

Control units

	CAED ANR 5-24-PO	CAED ANR 9-24-PO
C24C		●
C24CW	●	
D24C		●
D24CW	●	

Connecting diagram

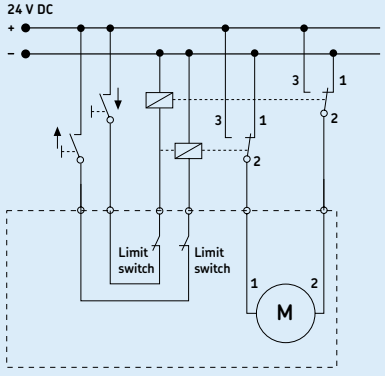

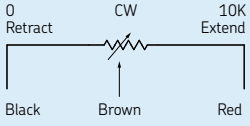

Connection diagram for linear potentiometer.

Dimensional drawing

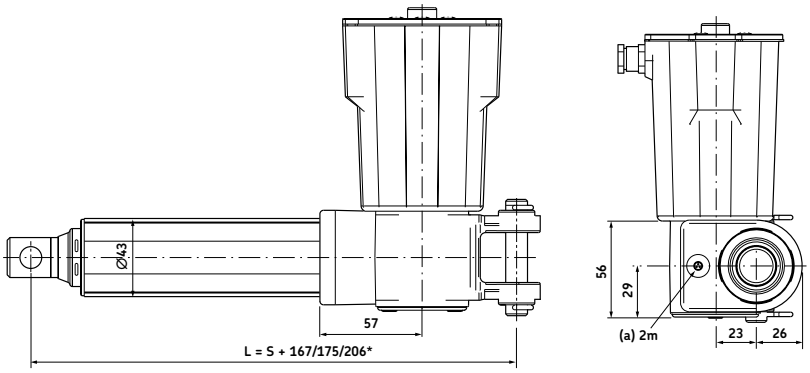

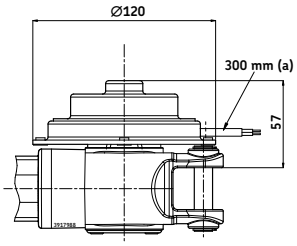

D24C/D24CW

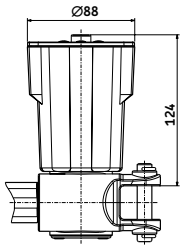

C24C/C24CW

Legend:
S = stroke
L = retracted length
(a) = cable length

See drawings of front and rear attachments on page 276.

* Dimension depends on selected front attachment

Technical data

		Unit	CAP 43B
Rated push load		N	1 500 to 4 000
Rated pull load		N	1 500 to 4 000
Speed (full load to no load)		mm/s	5 to 65[1)]
Stroke		mm	50 to 700
Retracted length		mm	S+167/175/206[2)]
Voltage		V DC	24
Power consumption		W	N/A
Current consumption	24 V DC	A	9
	24 V DC	A	5 (for motors C24CW and D24CW)
Duty cycle		%	20
Ambient temperature		°C	–20 to +50
Type of protection		IP	44
Weight		kg	2,0 to 2,7

1) Depending on selected motor
2) Dimension depends on selected front attachment

Performance diagrams

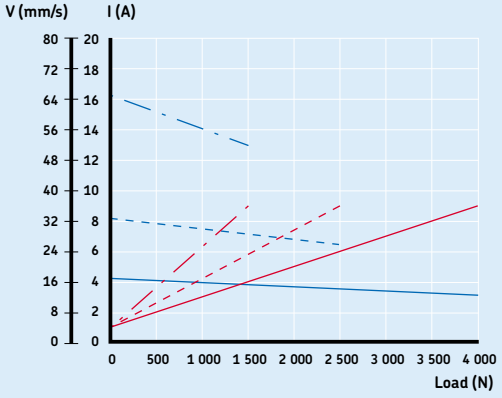

CAP 43B.../C24C

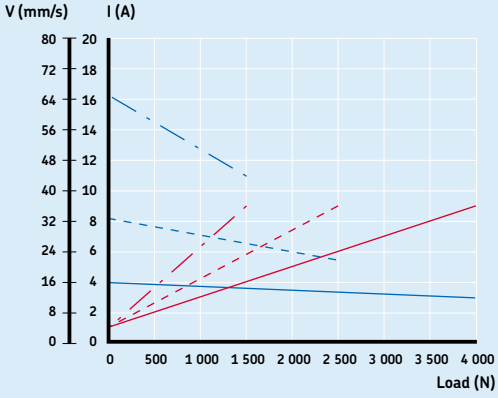

CAP 43B.../D24C

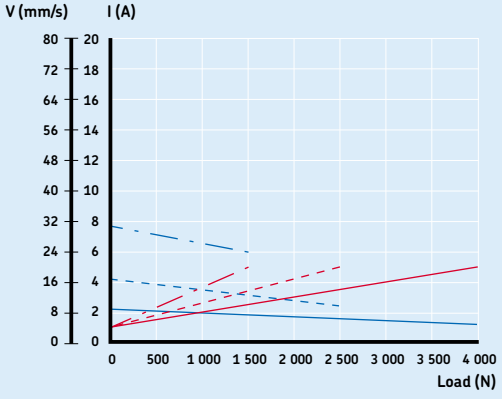

CAP 43B.../C24CW

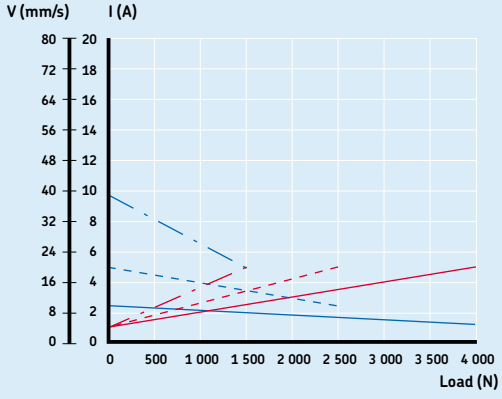

CAP 43B.../D24CW

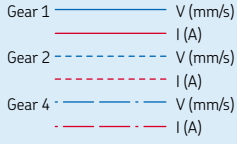

Duty cycle

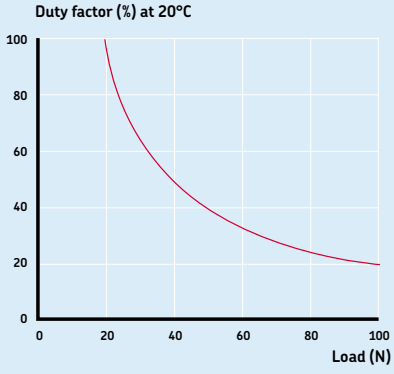

Ordering key

Dynamic load (N) / Speed (mm/s)			Motor options	
4 000/xx 4 000/17-13 4 000/9-5 4 000/16-12 4 000/10-5	2 500/xx 2 500/33-26 2 500/17-10 2 500/33-22 2 500/20-10	1 500/xx 1 500/65-52 1 500/31-24 1 500/65-44 1 500/39-20	No motor 24 V DC, IP44 24 V DC, low speed, IP44 24 V DC, flat motor, IP44 24 V DC, flat motor, low speed, IP44	0000 C24C C24CW D24C D24CW
1	**2**	**4**		

C A P [ ] 4 3 B X [ ] [ ] [ ] X [ ] [ ] [ ] [ ] [ ] / [ ] [ ] [ ] [ ] [ ] [ ] [ ] [ ]

Type

Motor assembly:
Right R
Left L

Stroke (S):
50 mm 050
100 mm 100
200 mm 200
300 mm 300
400 mm 400
500 mm 500
700 mm 700

Rear attachment (see page 276):
Fork ear, ∅=12,0 mm A1
Fork ear, ∅=12,7 mm A2
Single ear, ∅=12,0 mm K1
Single ear, ∅=12,7 mm K2

Front attachment (see page 276):
Hole, ∅=12,0 mm G1
Hole, ∅=12,7 mm G2
Male thread, M12 G3
Female thread, M12 G4
Fork ear, ∅=10,1 mm G5

Option:
Friction clutch F
Back-up nut S

Option for motors C24C(W):
No cable U
Straight, 2,0 m T2

EMC filter M

Motor without cover N

Linear actuator CAT 32B

Benefits

- Small
- Robust
- Modular
- Lubricated for service life
- High efficiency
- Digital encoder feedback



Suitable control units and accessories

	Control units		Limit switch	Encoder
	CAED 5-24R	CAED 9-24R	CAXB 32B[1]	E2[2]
C12C			●	●
D12C			●	●
C24C		●	●	●
C24CW	●		●	●
D24C		●	●	●
D24CB			●	●
D24CS		●	●	●
D24CW	●		●	●
CAES 31C	●	●		

Hand switch
Foot switch
Desk switch

[1] See page 379
[2] See page 380

Connecting diagram

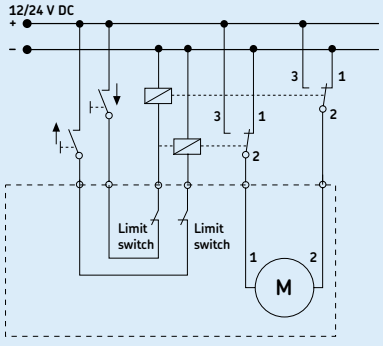

Dimensional drawing

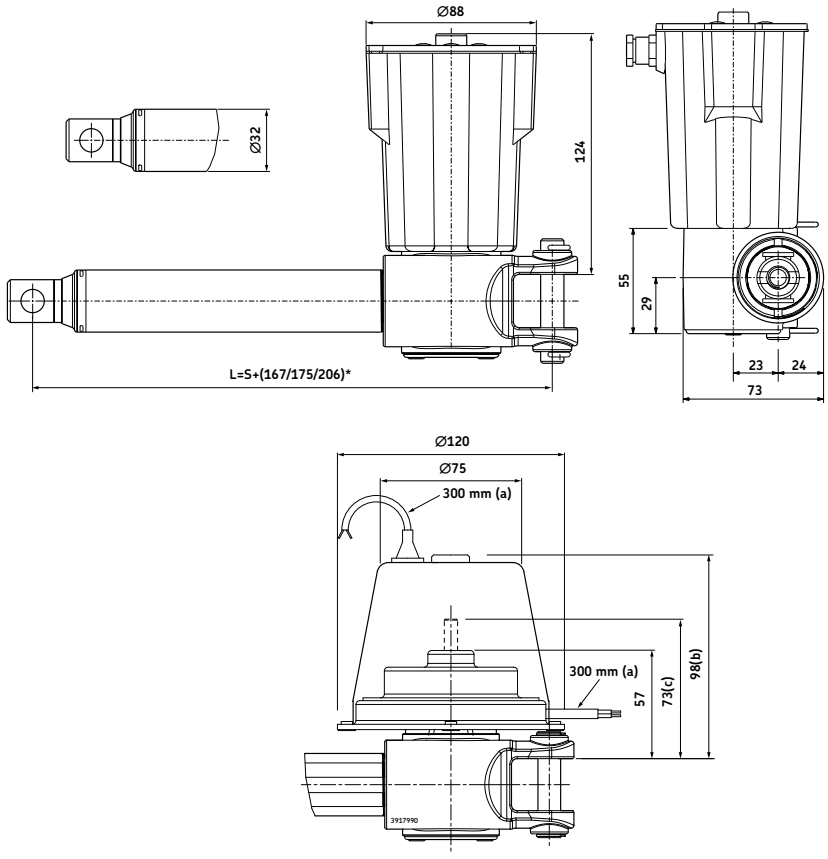

D12C, D24C, D24CB, D24CS, D24CW

Legend:
S = stroke
L = retracted length
(a) = cable length
(b) = cover for brake (D24CB)
(c) = extended shaft (D24CS)

See drawings of front and rear attachments and motor options on page 276.

* Dimension depends on selected front attachment

Technical data

		Unit	CAT 32B
Rated push load		N	1 000 to 4 000
Rated pull load		N	1 000 to 4 000
Speed (full load to no load)		mm/s	5 to 52[1]
Stroke		mm	50 to 700
Retracted length		mm	S+167/175/206[2]
Voltage		V DC	12 or 24
Power consumption		W	N/A
Current consumption	12 V DC	A	18
	24 V DC	A	9
	24 V DC	A	5 (for motors C24CW and D24CW)
Duty cycle		%	20
Ambient temperature		°C	–20 to +50
Type of protection		IP	20/44/65
Weight		kg	2 to 3,5

[1] Depending on selected motor
[2] Dimension depends on selected front attachment

Performance diagrams

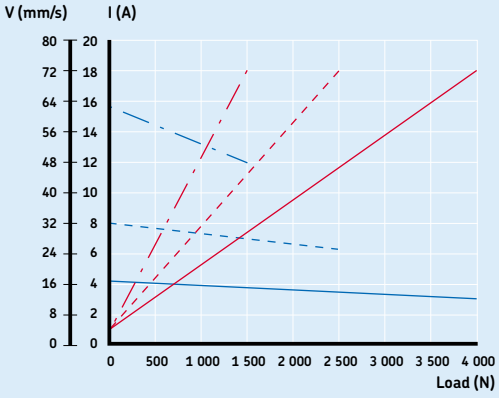

CAT 32B.../C12C

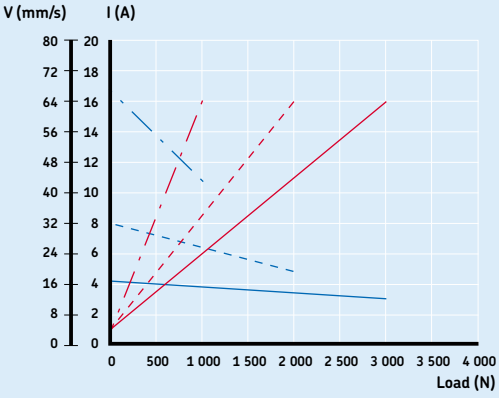

CAT 32B.../D12C

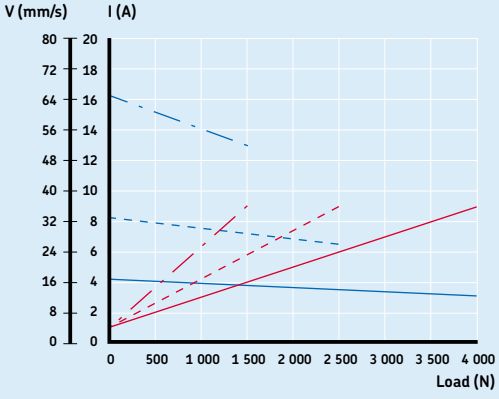

CAT 32B.../C24C

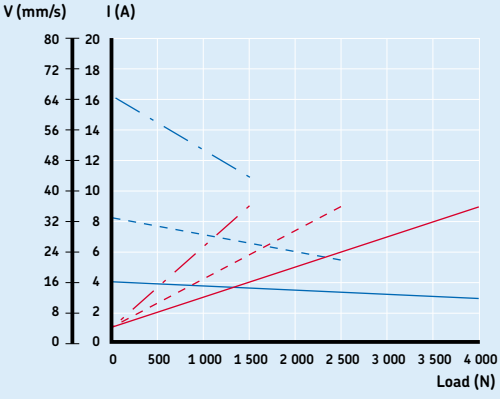

CAT 32B.../D24C/D24CB/D24CS

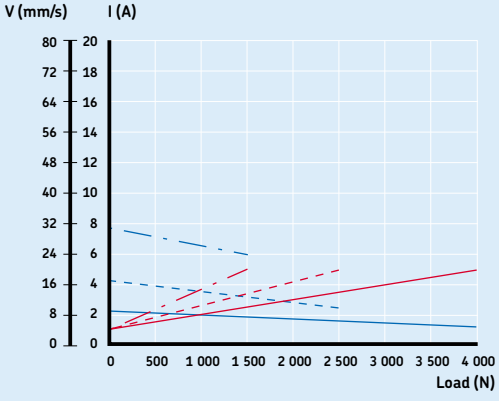

CAT 32B.../C24CW

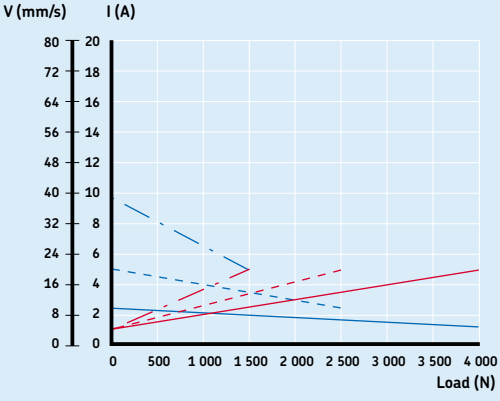

CAT 32B.../D24CW



Ordering key

Dynamic load (N) / Speed (mm/s)			Motor options	
4 000/xx	2 500/xx	1 500/xx	No motor	0000
4 000/17–12	2 500/32–25	1 500/63–48	12 V DC, IP44 (65)	C12C
3 000/17–11	2 000/34–19	1 000/67–43	12 V DC, flat motor, IP44	D12C
4 000/17–13	2 500/33–26	1 500/65–52	24 V DC, IP44 (65)	C24C
4 000/9–5	2 500/17–10	1 500/31–24	24 V DC, low speed motor, IP44 (IP65)	C24CW
4 000/16–12	2 500/33–22	1 500/65–44	24 V DC, flat motor, IP44	D24C
4 000/16–12	2 500/33–22	1 500/65–44	24 V DC, flat motor, brake, IP20	D24CB
4 000/16–12	2 500/33–22	1 500/65–44	24 V DC, flat motor, ext.shaft, IP44	D24CS
4 000/10–5	2 500/20–10	1 500/39–20	24 V DC, flat motor, low speed, IP44	D24CW
1	**2**	**4**		

C A T [ ] 3 2 B X [ ] [ ] [ ] X [ ] [ ] [ ] [ ] [ ] [ ] [ ] / [ ] [ ] [ ] [ ] [ ] [ ] [ ] [ ] [ ]

Type

Motor assembly:

Right	R
Left	L

Stroke (S):

50 mm	050
100 mm	100
200 mm	200
300 mm	300
400 mm	400
500 mm	500
700 mm	700
Other stroke lengths	- - -

Rear attachment (see page 276):

Fork ear, ∅=12,0 mm	A1
Fork ear, ∅=12,7 mm	A2
Single ear, ∅=12,0 mm	K1
Single ear, ∅=12,7 mm	K2

Front attachment (see page 276):

Hole, ∅=12,0 mm	G1
Hole, ∅=12,7 mm	G2
Male thread, M12	G3
Female thread, M12	G4
Fork ear, ∅=10,1 mm	G5

Feedback:

No encoder (no code)	
Encoder (for all standard motors)	E2

Option:

Friction clutch (not available with option encoder)	F
No friction clutch	Z
Back-up nut	S

Option for CxxC motors:

No cable	U
EMC filter	M
Motor without cover	N
IP65 (mandatory to state type of cable T2 or T2P)	I
Straight cable, 2,0 m, no plug	T2
Straight cable, 2,0 m, jack plug	T2P

Options shown in italics are only available on demand. Contact SKF for more information on minimum quantities and additional costs.

Linear actuator Matrix 1

Benefits

- Silent operation
- Full system with control unit, operating switch and accessories
- Synchronization possible
- Compact and aesthetic
- Back-up nut as standard



Suitable control units and accessories

Control units

	SCU 1	SCU 5	SCU 9	VCU 5	VCU 8	VCU 9	BCU 5	BCU 8	MCU
MAX 1	●	●	●	●	●	●	●	●	●
EHA 1									●
EHA 3	●	●	●	●	●	●	●	●	
STJ	●	●	●	●	●	●	●	●	
STA									●
STE	●	●	●	●	●	●	●	●	

Hand switch
Foot switch
Desk switch

Connecting diagram*

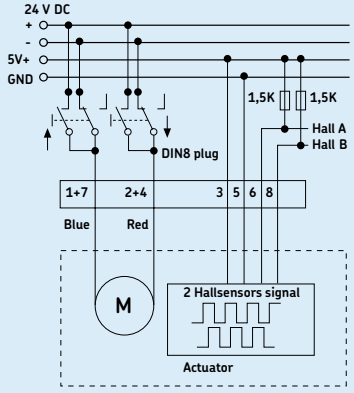

* Only valid for MAX 11. MAX 10 must be operated by a BCU, MCU, SCU or VCU control unit.

Dimensional drawing

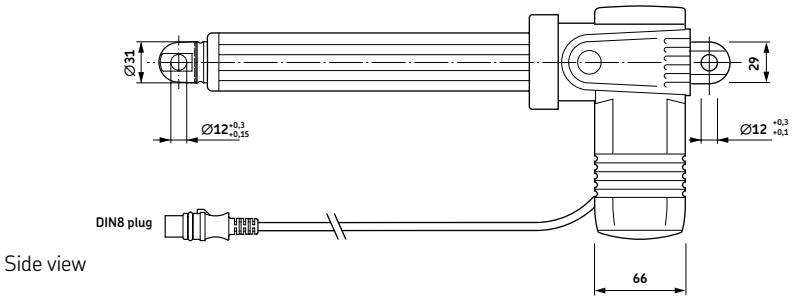

Side view

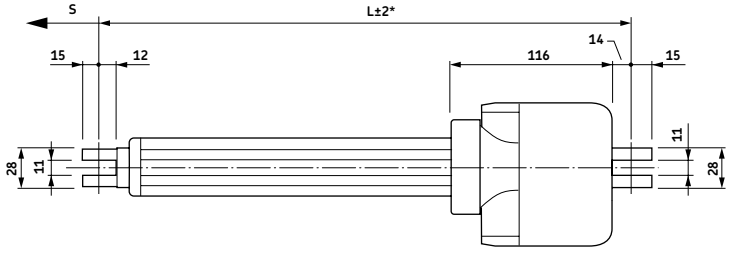

Top view

* S < 350 mm; L = 195 + S
S > 350 mm; L = 260 + S

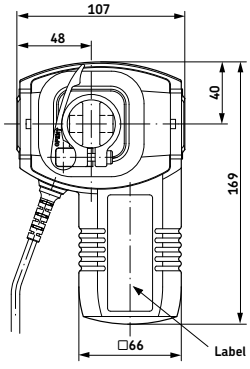

Rear view

Rear attachment position
Standard 0°

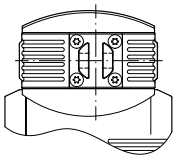

Turned 90°

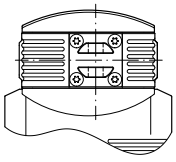

Technical data

	Unit	MAX 1..A..	MAX 1..B..	MAX 1..C..
Rated push load	N	4 000	2 000	1 500
Rated pull load	N	4 000	2 000	1 500
Speed (full load to no load)	mm/s	5 to 7	6 to 9	12,7 to 18
Stroke	mm	50 to 700	50 to 700	50 to 700
Retracted length	mm	S + 195/260*	S + 195/260*	S + 195/260*
Voltage	V DC	24	24	24
Power consumption	W	120	120	120
Current consumption	A	5	5	5
Duty cycle	%	10 (1/9)	10 (1/9)	10 (1/9)
Ambient temperature	°C	0 to +40	0 to +40	0 to +40
Type of protection	IP	66S	66S	66S
Weight (at 200 mm stroke)	kg	4,0	3,7	3,6
Color	–	Grey	Grey	Grey

* S<350 mm, L = 195 + S
S>350 mm, L = 260 + S

Performance diagrams

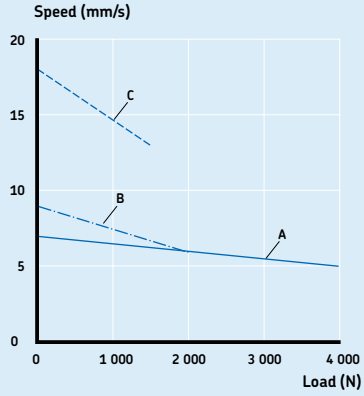

Speed-load diagram

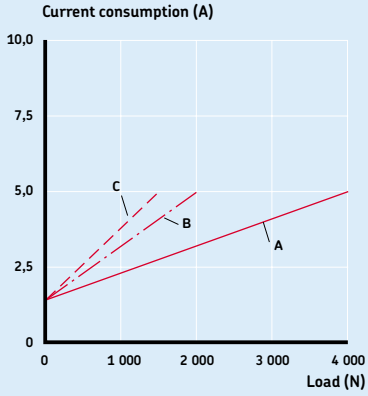

Current-load diagram

Safety factor load conditions

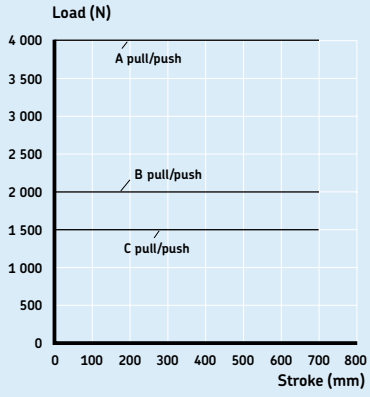

Push load reduction static
Safety factor S=1

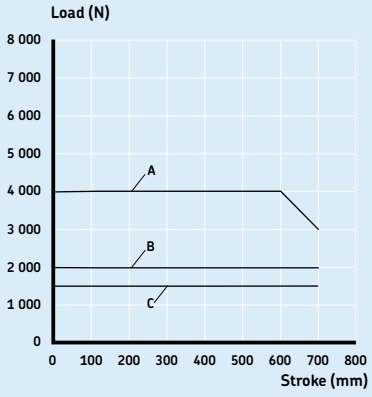

Push load reduction static
Safety factor S=2

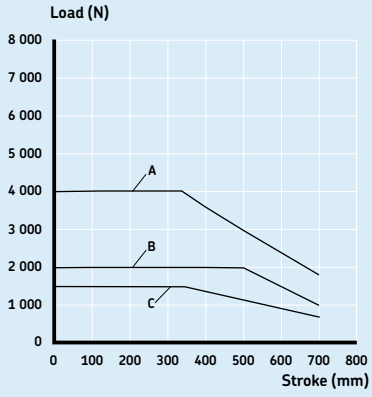

Push load reduction static
Safety factor S=4 (EN60601)

Ordering key

M	A	X	1		–							A						0	0	0

Type

Voltage:

24 V DC	0
24 V DC with integrated current cut-off	1

Load:

4 000 N	A
2 000 N	B
1 500 N	C

Stroke (S):

50 mm	050 245
100 mm	100 295
150 mm	150 345
200 mm	200 395
250 mm	250 445
300 mm	300 495
350 mm	350 545
400 mm	400 660
450 mm	450 710
500 mm	500 760
550 mm	550 810
600 mm	600 860
650 mm	650 910
700 mm	700 960
Other stroke lengths; 50<S<700 mm	--- ---

Cable / Connecting plug:

Coiled, 0,75 m (not stretched) / DIN8 plug	*0B*
Straight, 2,5 m / DIN8 plug	C5
Special cable length on request	- -

Orientation of rear attachment:

No fork head (customized option)	0
Standard (as drawing)	1
Turned 90°	2

Option 1:

No option, only valid for actuator "A" (push and pull)	0
Quick-release +EKZm, push, fork head bore parallel to button (for actuator design "C" is L= +115 mm)*	E
*Quick-release +EKZm, push, fork head bore 90° to button (for actuator design "C" is L= +115 mm)**	*F*
Mechanical anti-pinching, motor direction pull, no fixing in term. position (for load "A", L= +45 mm; "B"and "C", L= +30 mm)	I
Mechanical anti-pinching, motor direction push, no fixing in term. position (for load "A", L= +45 mm; "B"and "C", L= +30 mm)	J
Push load, for actuator version "B" and "C"	M
Pull load, for actuator version "B" and "C"	N

EKZm: mechanical anti-pinching *min. stroke 150 mm up to 300 mm

Option 2:

No option	0
2-Hall encoder, DIN8 plug	F
Lifetime monitoring	*M*
Lifetime monitoring, 2-Hall encoder, DIN8 plug	*P*

Option 3:

No option	–
Emergency lowering, fork head bore parallel to clamping lever (for actuator design "A", L+30 mm)	V
Emergency lowering, fork head bore 90° to clamping lever (for actuator design "A", L+30 mm)	*W*

Options shown in italics are only available on demand. Contact SKF for more information on minimum quantities and additional costs.

Linear actuator CAR 32

Benefits

- Industrial reliable and robust actuator
- Wide range of components
- Right- and left-hand version



Suitable control units and accessories

	Control units		Limit switch
	CAED 5-24R	CAED 9-24R	CAXB 32*
D12C			●
D24C		●	●
D24CW	●		●
D24CS		●	●
D24CB			●
CAES 31C	●	●	

Hand switch
Foot switch
Desk switch

* See page 379

Connecting diagram

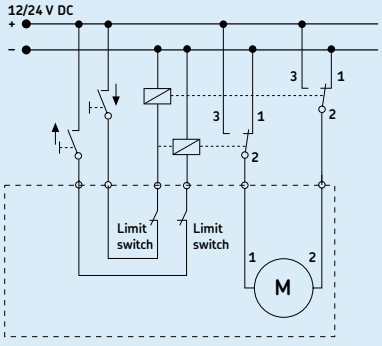

Dimensional drawing

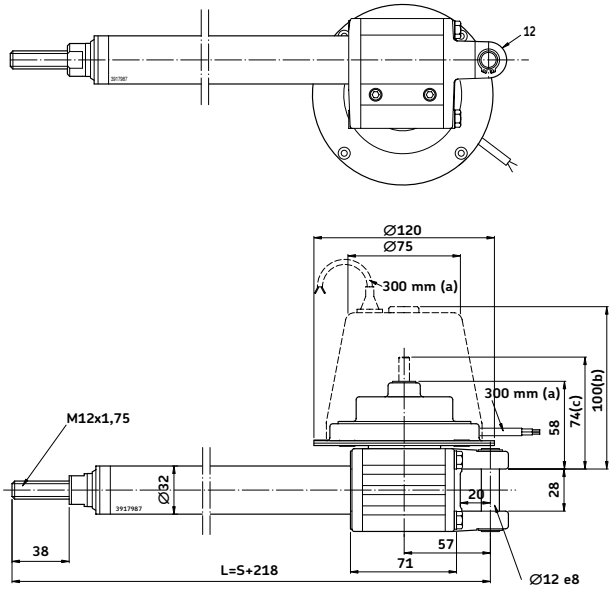

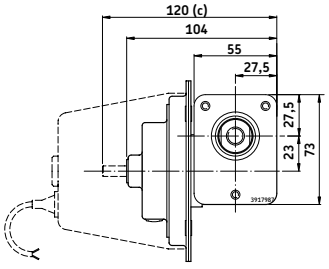

Legend:
S = stroke
L = retracted length
(a) = cable length
(b) = cover for brake (D24CB)
(c) = extended shaft (D24CS)

Technical data

		Unit	CAR 32
Rated push load		N	1 000 to 3 500
Rated pull load		N	1 000 to 3 500
Speed (full load to no load)		mm/s	5 to 60
Stroke		mm	50 to 700
Retracted length		mm	S+ 218
Voltage		V DC	12 or 24
Power consumption		W	N/A
Current consumption	12 V DC	A	13
	24 V DC	A	8
	24 V DC	A	5 (for motor D24CW)
Duty cycle		%	25
Ambient temperature		°C	–20 to +70
Type of protection		IP	20/44
Weight		kg	2,1 to 3,7

Performance diagrams

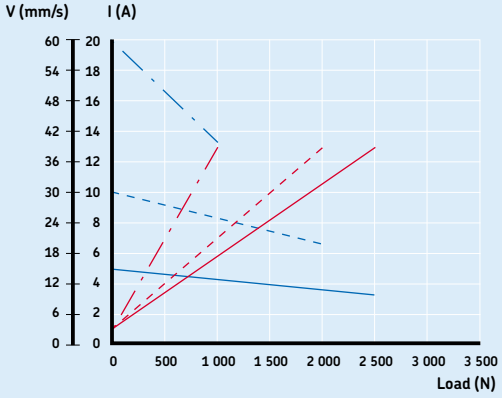

CAR 32.../D12C

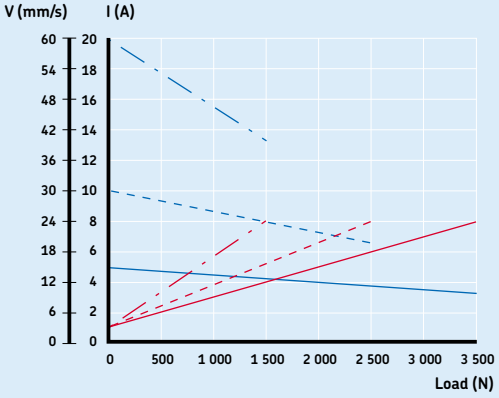

CAR 32.../D24C/D24CS/D24CB

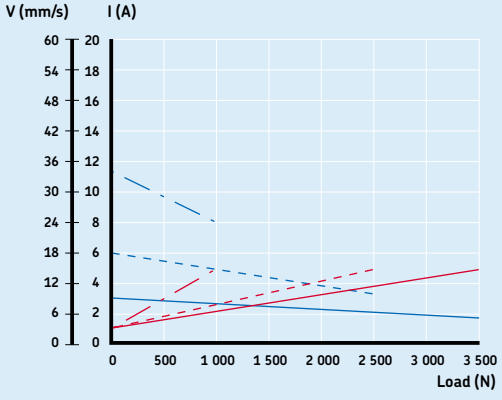

CAR 32.../D24CW



Duty cycle

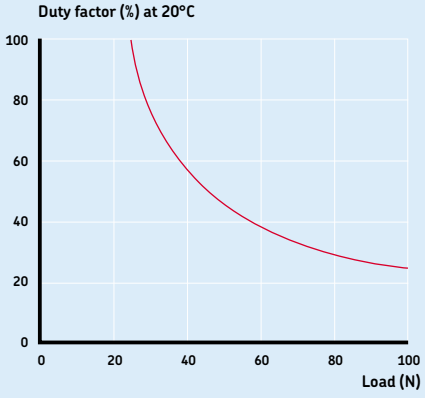

Ordering key

Dynamic load (N) / Speed (mm/s)			Motor options	
3 500/xx 2 500/15–10 3 500/15–10 3 500/9–5 3 500/15–10 3 500/15–10	2 500/xx 2 000/30–20 2 500/30–20 2 500/18–10 2 500/30–20 2 500/30–20	1 500/xx 1 000/60–40 1 500/60–40 1 500/34–24 1 500/60–40 1 500/60–40	No motor 12 V DC, flat motor, IP44 24 V DC, flat motor, IP44 24 V DC, flat motor, low speed, IP44 24 V DC, flat motor, extended shaft, IP44 24 V DC, flat motor, brake, IP20	0000 D12C D24C D24CW D24CS D24CB
1	**2**	**4**		

C A R ☐ 3 2 X ☐ ☐ ☐ X ☐ ☐ / ☐ ☐ ☐ ☐ ☐ ☐

Type

Motor assembly:

Right	R
Left	L

Stroke (S):

50 mm	050
100 mm	100
200 mm	200
300 mm	300
500 mm	500
700 mm	700
Other stroke lengths	---

Option:

Friction clutch	F
Back-up nut	S

Options shown in italics are only available on demand. Contact SKF for more information on minimum quantities and additional costs.

Linear actuator CAP 32

Benefits

- Easy installation
- Robust and reliable
- Lubricated for service life
- Right- and left-hand version
- Analogical feedback



Suitable control units and accessories

	Control units	
	CAED ANR 5-24-PO	CAED ANR 9-24-PO
D12C		
D24C		●
D24CW	●	
D24CS		●
D24CB		

Connecting diagram

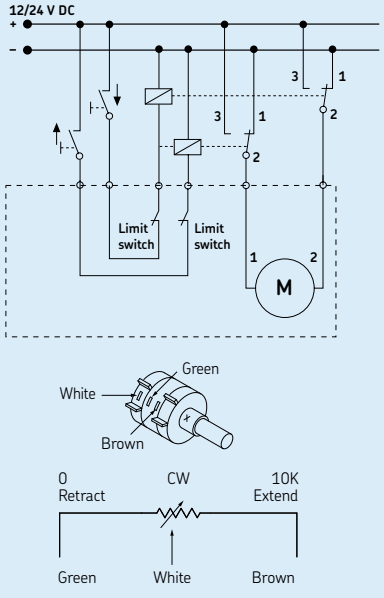

Connection diagram for rotating potentiometer.

Dimensional drawing

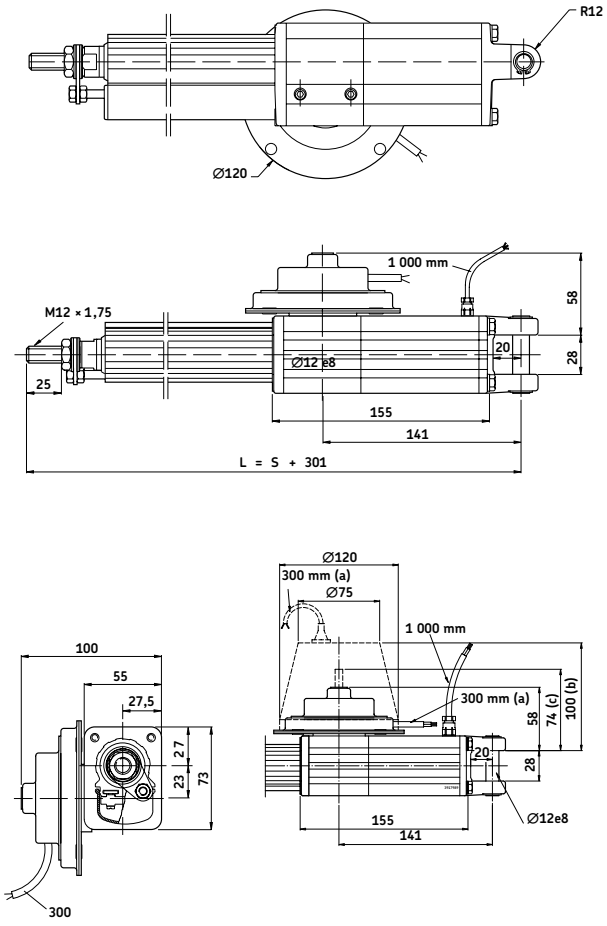

Legend:
S = stroke
L = retracted length
(a) = cable length
(b) = cover for brake (D24CB)
(c) = extended shaft (D24CS)

Technical data

		Unit	CAP 32
Rated push load		N	1 000 to 3 500
Rated pull load		N	1 000 to 3 500
Speed (full load to no load)		mm/s	5 to 60*
Stroke		mm	50 to 700
Retracted length		mm	S+301
Voltage		V DC	12 or 24
Power consumption		W	N/A
Current consumption	12 V DC	A	13
	24 V DC	A	8
	24 V DC	A	5 (for motor D24CW)
Duty cycle		%	25
Ambient temperature		°C	–20 to +50
Type of protection		IP	20/44
Weight		kg	2,9 to 5,0

* Depending on selected motor

Performance diagrams

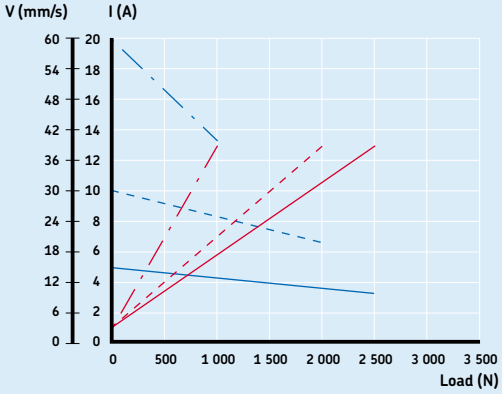

CAP 32.../D12C

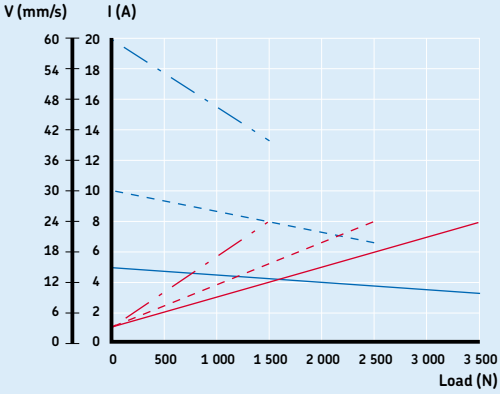

CAP 32.../D24C/D24CS/D24CB

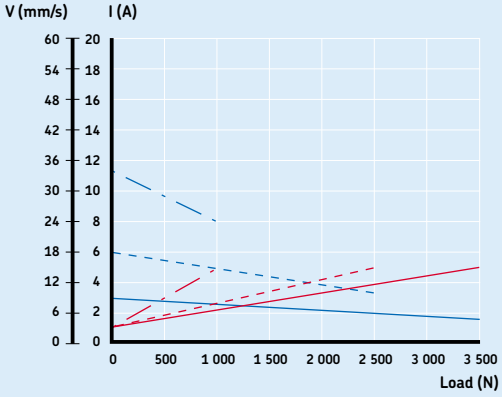

CAP 32.../D24CW

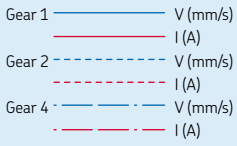

Duty cycle

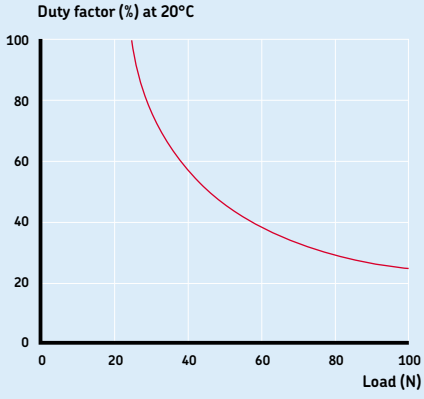

Ordering key

Dynamic load (N) / Speed (mm/s)			Motor options	
3 500/xx	2 500/xx	1 500/xx	No motor	0000
2 500/15–10	2 000/30–20	1 000/60–40	12 V DC, flat motor, IP44	D12C
3 500/15–10	2 500/30–20	1 500/60–40	24 V DC, flat motor, IP44	D24C
3 500/9–5	2 500/18–10	1 500/34–24	24 V DC, flat motor, low speed, IP44	D24CW
3 500/15–10	2 500/30–20	1 500/60–40	24 V DC, flat motor, extended shaft, IP44	D24CS
3 500/15–10	2 500/30–20	1 500/60–40	24 V DC, flat motor, brake, IP20	D24CB
1	**2**	**4**		

C A P ☐ 3 2 X ☐ ☐ ☐ X ☐ ☐ / ☐ ☐ ☐ ☐ ☐ ☐ ☐

Type

Motor assembly:

Right	R
Left	L

Stroke (S):

50 mm	050
100 mm	100
200 mm	200
300 mm	300
500 mm	500
700 mm	700
Other stroke lengths	---

Option:

Back-up nut	S

Options shown in italics are only available on demand. Contact SKF for more information on minimum quantities and additional costs.

Linear actuator CAP 43A

Benefits

- Robust and reliable
- Long lifetime
- Wide range of components
- Right- and left-hand version
- Analogical feedback



Suitable control units and accessories

	Control units	
	CAED ANR 5-24-PO	CAED ANR 9-24-PO
C24C		●
C24CW	●	
D24C		●
D24CW	●	

Connecting diagram

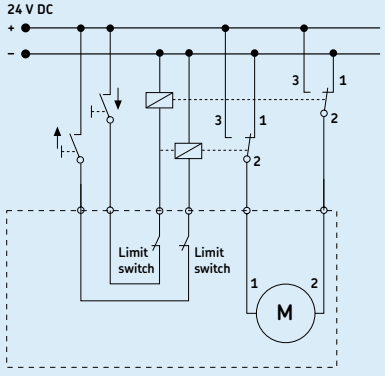

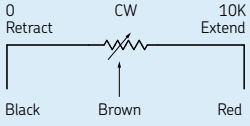

Connection diagram for linear potentiometer.

Dimensional drawing

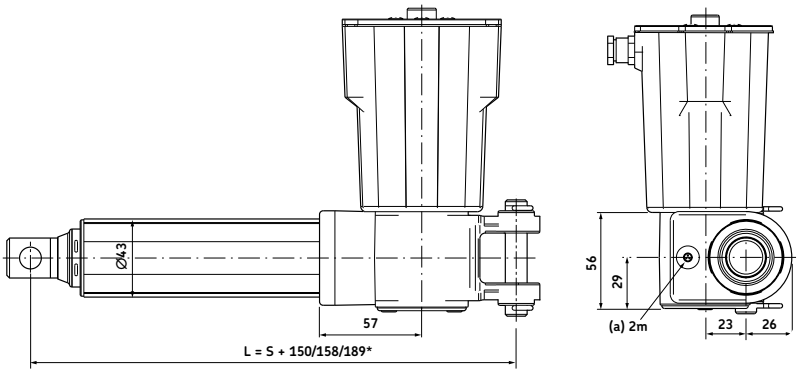

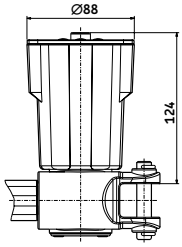

C24C, C24CW

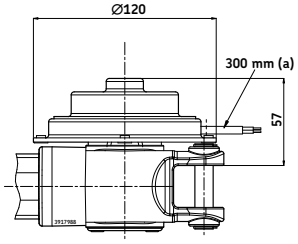

D24C, D24CW

Legend:
S = stroke
L = retracted length
(a) = cable length

See drawings of front and rear attachments on page 276.

* Dimension depends on selected front attachment

Technical data

		Unit	CAP 43A
Rated push load		N	1 000 to 3 000
Rated pull load		N	1 000 to 3 000
Speed (full load to no load)		mm/s	5 to 52[1)]
Stroke		mm	100 to 400
Retracted length		mm	S+150/158/189[2)]
Voltage		V DC	24
Power consumption		W	N/A
Current consumption	24 V DC	A	9
	24 V DCW	A	5
Duty cycle		%	15
Ambient temperature		°C	–20 to +50
Type of protection		IP	44
Weight		kg	2,0 to 2,7

[1)] Depending on selected motor
[2)] Dimension depends on selected front attachment

Performance diagrams

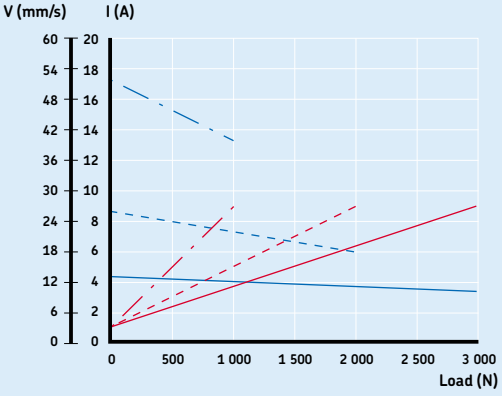

CAP 43A.../C24C

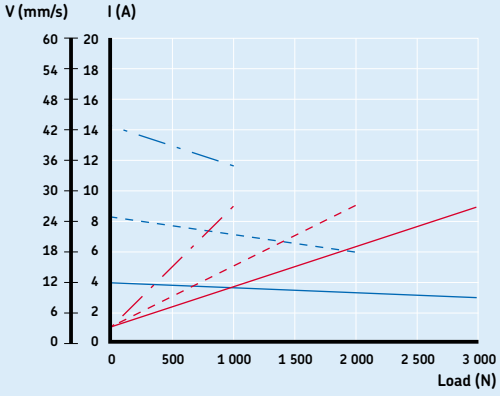

CAP 43A.../D24C

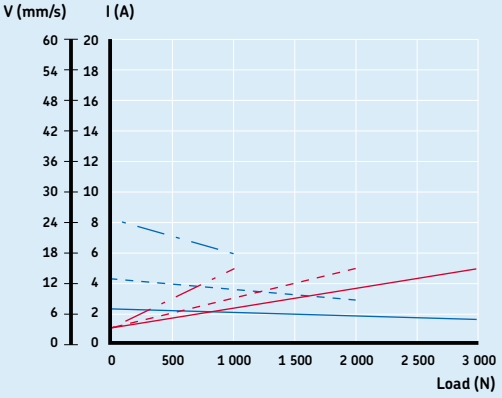

CAP 43A.../C24CW

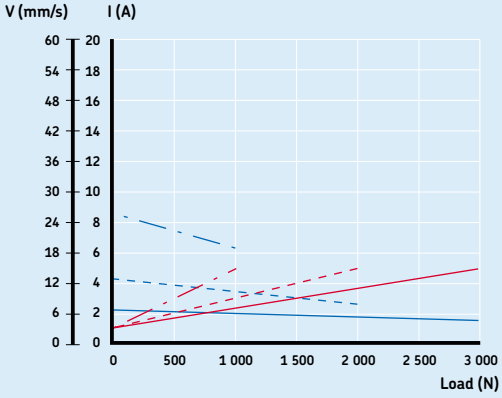

CAP 43A.../D24CW



Duty cycle

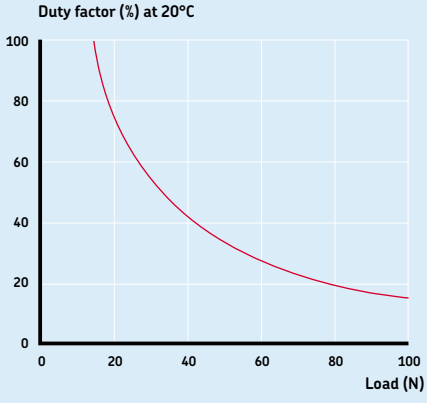

Ordering key

Dynamic load (N) / Speed (mm/s)			Motor options	
3 000/xx 3 000/13–10 3 000/7–5 3 000/12–9 3 000/7–5	2 000/xx 2 000/26–20 2 000/13–9 2 000/25–18 2 000/13–8	1 000/xx 1 000/52–40 1 000/25–18 1 000/43–35 1 000/26–19	No motor 24 VDC, IP44 24 VDC, IP44 24 VDC, flat motor, IP44 24 VDC, flat motor, low speed, IP44	0000 C24C C24CW D24C D24CW
1	**2**	**4**		

C A P ☐ 4 3 A X ☐ ☐ ☐ X ☐ ☐ ☐ ☐ ☐ / ☐ ☐ ☐ ☐ ☐ ☐ ☐ ☐ ☐

Type

Motor assembly:
Right R
Left L

Stroke (S):
100 mm 100
200 mm 200
300 mm 300
400 mm 400

Rear attachment (see page 276):
Fork ear, ∅=12,0 mm A1
Fork ear, ∅=12,7 mm A2
Single ear, ∅=12,0 mm K1
Single ear, ∅=12,7 mm K2

Front attachment (see page 276):
Hole, ∅=12,0 mm G1
Hole, ∅=12,7 mm G2
Male thread, M12 G3
Female thread, M12 G4
Fork ear, ∅=10,1 mm G5

Option:
Friction clutch F

Cable option for C24C(W) motors:
No cable U
Straight, 2,0 m T2

EMC filter M

Motor without cover N

Linear actuator CAT 33

Benefits

- Compact
- Robust
- Lubricated for service life
- Modular
- Digital encoder feedback



Suitable control units and accessories

	Control units		Encoder	Limit switch
	CAED 5-24R	CAED 9-24R	E2[1]	CAXC[2]
C12C			●	●
D12C			●	●
C24C		●	●	●
C24CW	●		●	●
D24C		●	●	●
D24CB			●	●
D24CS		●	●	●
D24CW	●		●	●
CAES 31C	●	●		

Hand switch
Foot switch
Desk switch

[1] See page 380
[2] See page 378

Connecting diagram

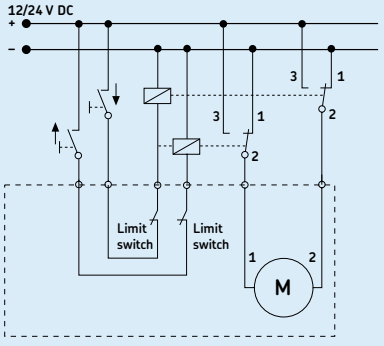

Dimensional drawing

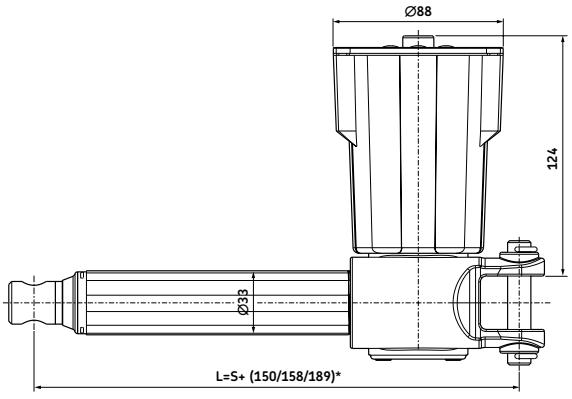

* Dimension depends on selected front attachment

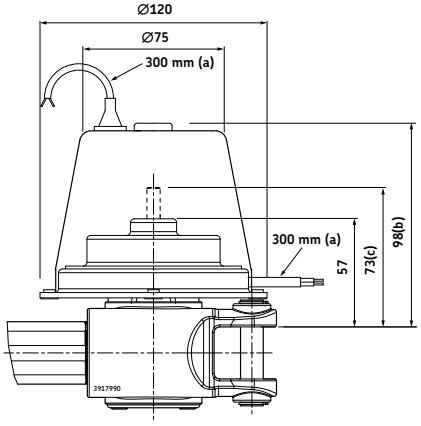

D12C, D24C, D24CB, D24CS, D24CW

Legend:
S = stroke
L = retracted length
(a) = cable length
(b) = cover for brake (D24CB)
(c) = extended shaft (D24CS)

See drawings of front and rear attachments and motor options on page 276.

Technical data

		Unit	CAT 33
Rated push load		N	800 to 3 000
Rated pull load		N	800 to 3 000
Speed (full load to no load)		mm/s	5 to 52[1]
Stroke		mm	100 to 400
Retracted length		mm	S+150/158/189[2]
Voltage		V DC	12 or 24
Power consumption		W	N/A
Current consumption	12 V DC	A	18
	24 V DC	A	9
	24 V DC	A	5 (for motors C24CW and D24CW)
Duty cycle		%	15
Ambient temperature		°C	–20 to +50
Type of protection		IP	20/44/65
Weight		kg	2 to 2,7

[1] Depending on selected motor
[2] Dimension depends on selected front attachment

Performance diagrams

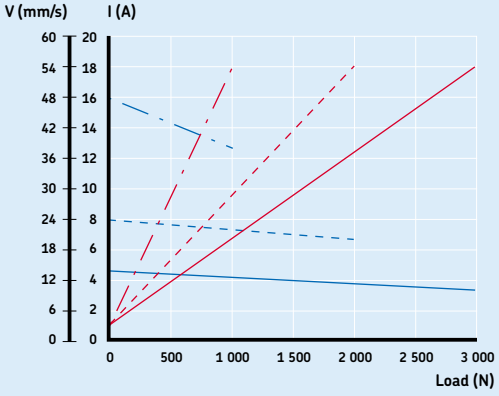

CAT 33.../C12C

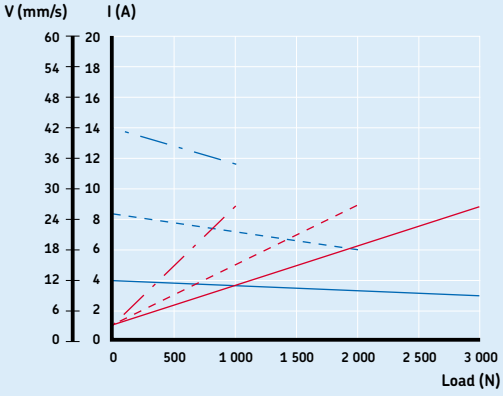

CAT 33.../D12C

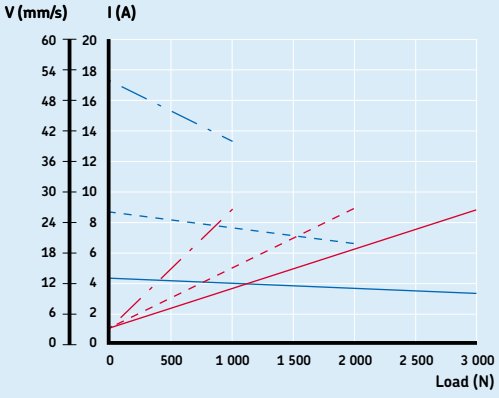

CAT 33.../C24C

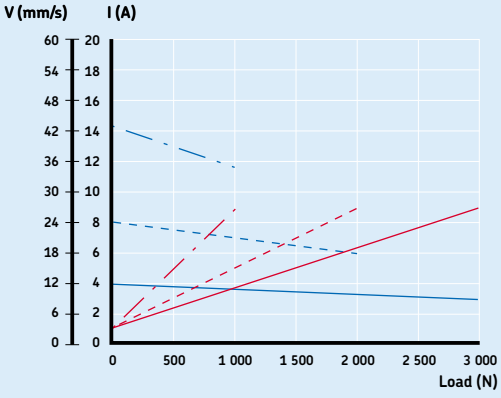

CAT 33.../D24C/D24CB/D24CS

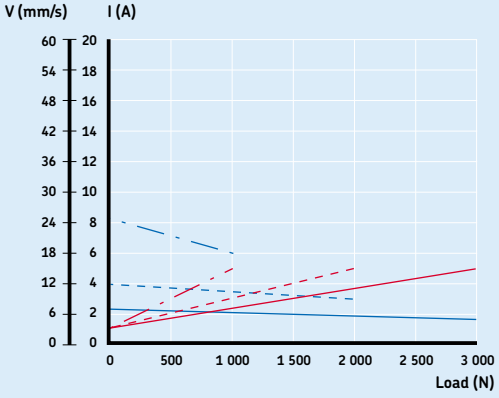

CAT 33.../C24CW

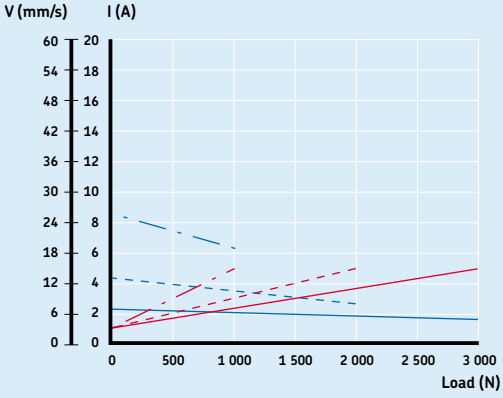

CAT 33.../D24CW

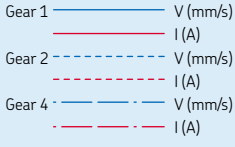

Ordering key

Dynamic load (N) / Speed (mm/s)			Motor options	
3 000/xx	2 000/xx	1 000/xx	No motor	0000
3 000/13–10	2 000/24–20	1 000/48–38	12 V DC, IP44 (65)	C12C
2 400/11–7	1 600/21–15	800/39–21	12 V DC, flat motor, IP44	D12C
3 000/13–10	2 000/26–20	1 000/52–40	24 V DC, IP44 (65)	C24C
3 000/7–5	2 000/13–9	1 000/25–18	24 V DC, low speed, IP44 (65)	C24CW
3 000/12–9	2 000/25–18	1 000/43–35	24 V DC, flat motor, IP44	D24C
3 000/12–9	2 000/25–18	1 000/43–35	24 V DC, flat motor, brake, IP20	D24CB
3 000/12–9	2 000/25–18	1 000/43–35	24 V DC, flat motor, IP44, ext. shaft	D24CS
3 000/7–5	2 000/13–8	1 000/26–19	24 V DC, flat motor, low speed, IP44	D24CW
1	**2**	**4**		

C A T ☐ 3 3 X ☐ ☐ ☐ X ☐ ☐ ☐ ☐ ☐ ☐ ☐ / ☐ ☐ ☐ ☐ ☐ ☐ ☐ ☐ ☐

Type

Motor assembly:

Right	R
Left	L

Stroke (S):

100 mm	100
200 mm	200
300 mm	300
400 mm	400
Other stroke lengths	- - -

Rear attachment (see page 276):

Fork ear, ∅=12,0 mm	A1
Fork ear, ∅=12,7 mm	A2
Single ear, ∅=12,0 mm	K1
Single ear, ∅=12,7 mm	K2

Front attachment (see page 276):

Hole, ∅=12,0 mm	G1
Hole, ∅=12,7 mm	G2
Male thread, M12	G3
Female thread, M12	G4
Fork ear, ∅=10,1 mm	G5

Feedback:

No encoder (no code)	
Encoder (for all standard motors)	E2

Option:

Friction clutch (not available with option encoder)	F
No friction clutch	Z

Option for CxxC motors:

No cable	U
EMC filter	M
Motor without cover	N
IP65 (mandatory to state type of cable T2 or T2P)	I
Straight cable, 2,0 m, no plug	T2
Straight cable, 2,0 m, jack plug	T2P

Options shown in italics are only available on demand. Contact SKF for more information on minimum quantities and additional costs.

Linear actuator CAHB–20 series

Benefits

- ACME screw drive
- Extension tube (stainless steel)
- Protection tube (steel)
- Enhanced corrosion resistance
- Mechanical overload protection (clutch)
- Lubricated for service life
- Robust, designed for tough environment
- Self-locking
- Certified (CE: EN 55011)



Connecting diagram

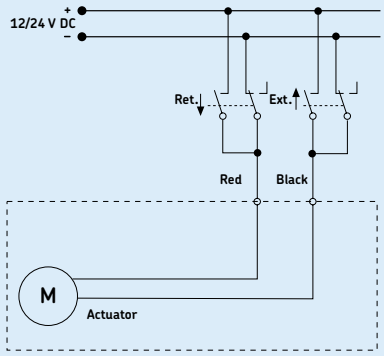

Different rear attachment

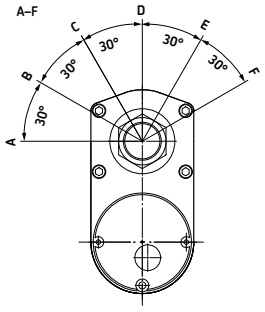

Dimensional drawing

Basic configuration (dashed line for optional limit switch)

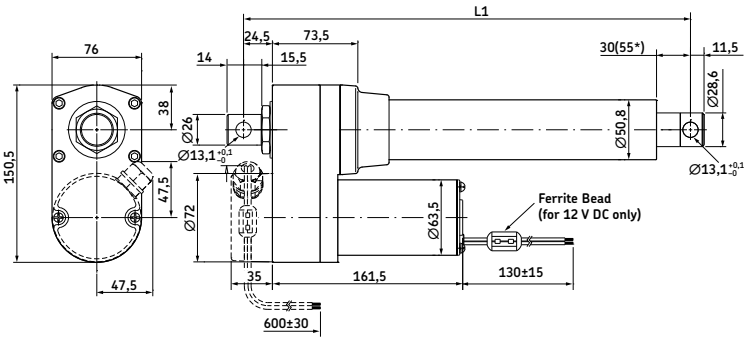

Without limit swicth:
RED (+) & BLACK (–) = retraction
RED (–) & BLACK (+) = extension
With limit switch:
RED (+) & BLACK (–) = extension
RED (–) & BLACK (+) = retraction

Legend:
L1 = retracted length
*55 = dimension with limit switch

	With limit switch[1]						Without limit switch[2]					
Stroke (mm)	**102**	**153**	**204**	**305**	**457**	**610**	**102**	**153**	**204**	**305**	**457**	**610**
L1 Retracted length	338	389	440	592	744	897	262	313	364	465	668	821

[1] Tolerance: S and L1 = ± 5,0 mm (If S≥305 mm, S = ± 7,5 mm)

[2] Tolerance: S = ± 2,5 mm and L1 = ± 3,8 mm

Technical data

		Unit	CAHB–20... 1	CAHB–20... 2
Rated push load		N	1 500	2 500
Rated pull load		N	1 500	2 500
Speed (full load to no load)		mm/s	27 to 33	13 to 17
Stroke		mm	102 to 610	102 to 610
Retracted length		mm	–*	–*
Voltage		V DC	12 or 24	12 or 24
Power consumption		W	N/A	N/A
Current consumption	12 V DC	A	16	14
	24 V DC	A	8	7
Duty cycle		%	25	25
Ambient temperature		°C	–40 to +85	–40 to +85
Type of protection		IP	66	66
Weight (at 305 mm stroke)		kg	5,5	5,5
Color		–	Black	Black

* see above table

Performance diagrams

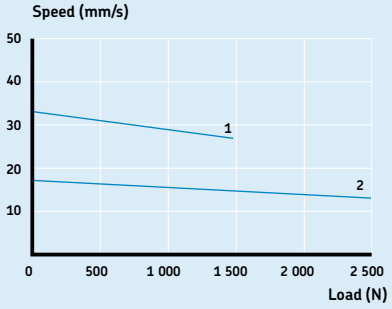

Speed-load diagram

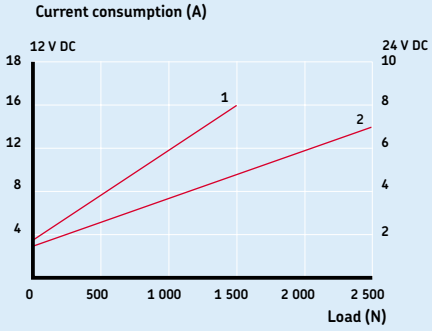

Current-load diagram

Dimensional drawing

Optional potentiometer (dashed line for optional limit switch)

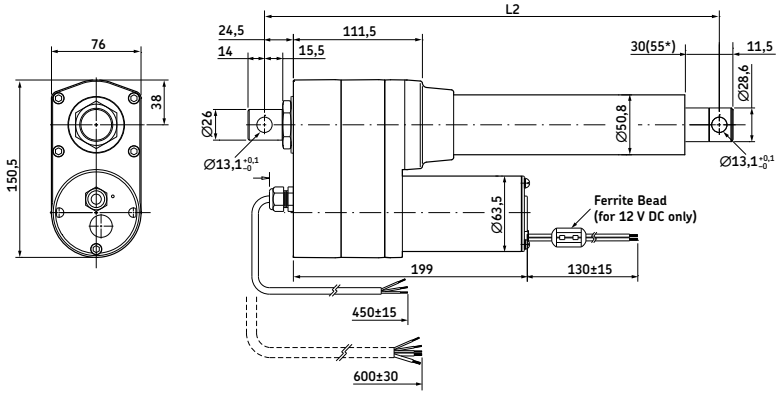

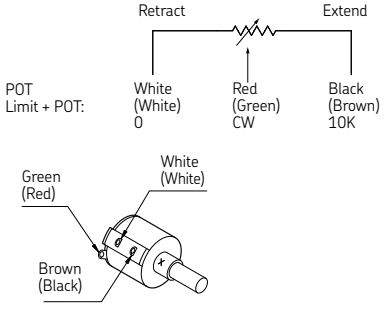

Legend:
L2 = retracted length
*55 = dimension with limit switch

Without limit swicth:
RED (+) & BLACK (–) = retraction
RED (–) & BLACK (+) = extension

With limit switch:
RED (+) & BLACK (–) = extension
RED (–) & BLACK (+) = retraction

	With limit switch[1]						Without limit switch[2]					
Stroke (mm)	**102**	**153**	**204**	**305**	**457**	**610**	**102**	**153**	**204**	**305**	**457**	**610**
L2 Retracted length	376	427	478	630	782	935	300	351	402	503	706	859

[1] Tolerance: S and L2 = ± 5,0 mm (If S≥ 305 mm, S = ± 7,5 mm)

[2] Tolerance: S = ± 2,5 mm and L2 = ± 3,8 mm

Potentiometer resolution

Stroke (mm)	**102**	**153**	**204**	**305**	**457**	**610**
Ohm/mm	59,0	59,0	29.5	29.5	9.84	9.84

Ordering key

CAHB–20–□□A–□□□ □□□–A□□□□□–000

Type

Voltage:

12 V DC	A
24 V DC	B

Load:

1 500 N	1
2 500 N	2

Screw:

Acme screw	A

Stroke:

102 mm	102
153 mm	153
204 mm	204
305 mm	305
457 mm	457
610 mm	610

Retracted length:

Stroke		
with L.S.[1]	w/o POT[2]	with POT[2]
102 mm	338 mm	376 mm
153 mm	389 mm	427 mm
204 mm	440 mm	478 mm
305 mm	592 mm	630 mm
457 mm	744 mm	782 mm
610 mm	897 mm	935 mm
w/o L.S.[1]		
102 mm	262 mm	300 mm
153 mm	313 mm	351 mm
204 mm	364 mm	402 mm
305 mm	465 mm	503 mm
457 mm	668 mm	706 mm
610 mm	821 mm	859 mm

IP:

Standard (IP 66)	A

Front attachment:

Standard (hole: ∅ 13,1 mm)	A
Customized	*X*

Rear attachment:

Standard (0° and hole: ∅ 13,1 mm)	A
30°	B
60°	C
90°	D
120°	E
150°	F
Customized	*X*

Option 1:

None	0
Limit switch (only for load version 2 500 N)	L

Option 2:

None	0
Potentiometer	P

Option 3:

None	0
Thermal protection	T

Options shown in italics are only available on demand. Contact SKF for more information on minimum quantities and additional costs.

[1] L.S.= Limit Switch
[2] POT= Potentiometer

Linear actuator CARE 33

Benefits

- Silent operation
- Multiple speed/load variants
- Easy to adjust limit switches
- Different attachment options
- Digital encoder feedback



Suitable control units and accessories

	Control units						Limit switch	Feed-back
	VCU 5	VCU 8	VCU 9	BCU 5	BCU 8	CAED 5-24R	CAXC 33[1]	2-Hall encoder[2]
CARE 33A 24V	●	●	●	●	●	●	●	●
CARE 33M 24V						●	●	●
CARE 33H 24V						●		●
CAES 31C						●		
EHA 3	●	●	●	●	●			
STJ	●	●	●	●	●			
STE	●	●	●	●	●			

Hand switch
Foot switch
Desk switch

[1] See page 378
[2] See page 381

Connecting diagram

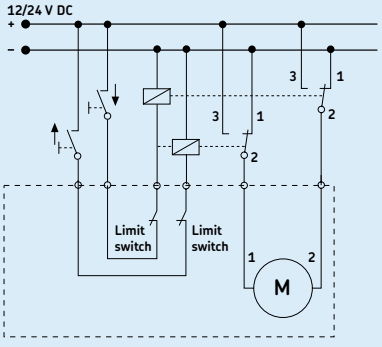

Dimensional drawing

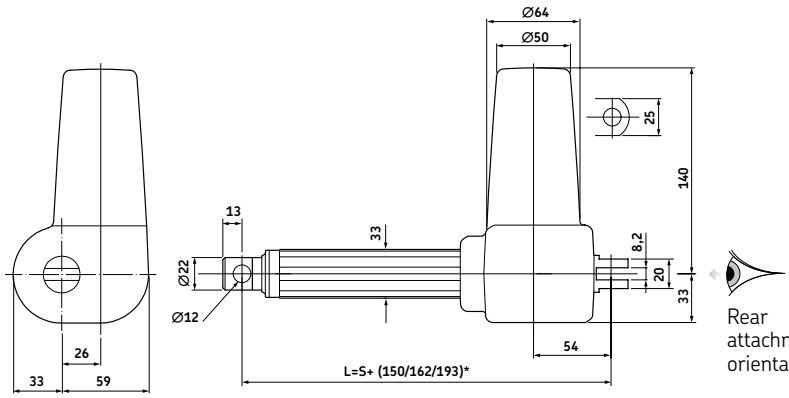

Rear attachment orientation view.

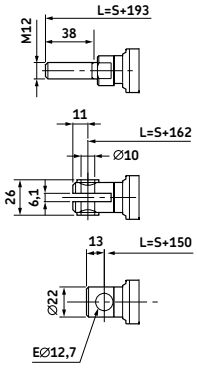

* Dimension depends on selected front attachment

Legend:
S = stroke
L = retracted length

Technical data

	Unit	CARE 33A	CARE 33M	CARE 33H
Rated push load	N	2 000	1 400	800
Rated pull load	N	2 000	1 400	800
Speed (full load to no load)	mm/s	8 to 12[1]	16 to 22[1]	32 to 45[1]
Stroke	mm	50 to 300	50 to 500	50 to 500
Retracted length	mm	S+150/162/193[2]	S+150/162/193[2]	S+150/162/193[2]
Voltage	V DC	24	24	24
Power consumption	W	N/A	N/A	N/A
Current consumption	A	3,5	3,5	3,5
Duty cycle	%	15	20	30
Ambient temperature	°C	–10 to +50	–10 to +50	–10 to +50
Type of protection	IP	44/65	44/65	44/65
Weight	kg	1,5 to 2,0	1,5 to 2,0	1,5 to 2,0
Color	–	Black	Black	Black

[1] Depending on selected motor
[2] Dimension depends on selected front attachment

Performance diagrams

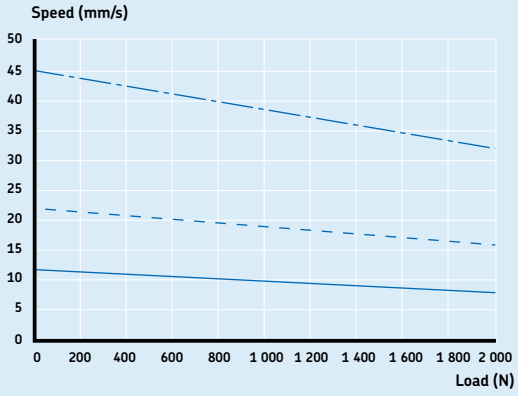

Speed-load diagram

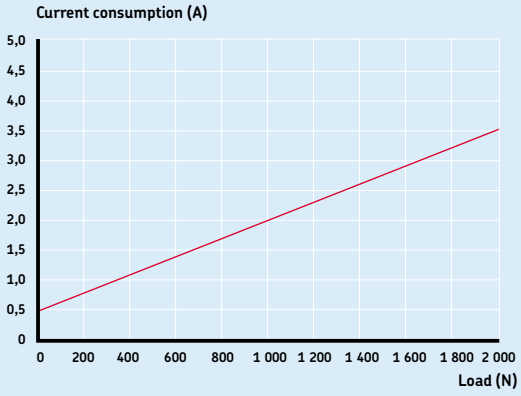

Current-load diagram

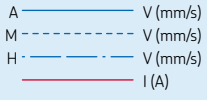

Ordering key

C A R E 3 3 [ ] [ ] [ ] [ ] [ ] [ ] [ ] [ ] [ ] [ ] [ ] [ ] [ ] [ ] [ ]

Type

Load:

2 000 N	A
1 400 N	M
800 N	H

Stroke (S):

50 mm	050
100 mm	100
150 mm	150
200 mm	200
300 mm	300
400 mm (not possible for CARE 33A)	400
500 mm (not possible for CARE 33A)	500
Other stroke lengths	---

Front attachment:

Hole, ∅=12,0 mm	1
Hole, ∅=12,7 mm	2
Hole 10 mm, slot 6,1 mm (retracted length, L=S+162 mm)	3
Male thread M12 (retracted length, L=S+193 mm)	4

Rear attachment:

Hole, ∅=12,0 mm	1
Hole, ∅=12,7 mm	2
Hole, ∅=8,0 mm	3
Hole, ∅=10,0 mm	4

Type of protection:

IP65	1
IP44	2

Feedback:

No option	0
2-Hall encoder	1

Cable/Connection plug:

Straight, 2,0 m, no plug	1
Coiled, 2,0 m, jack plug	2
Straight, 2,0 m, DIN 8 plug (for 2-Hall encoder)	3
Straight, 2,0 m, jack plug	5
Straight, 2,5 m, DIN8 plug BCU/VCU (ONLY available for CARE 33A)	C5

Orientation of rear attachment:

0°	000
15° clockwise	015
30° clockwise	030
45° clockwise	045
60° clockwise	060
75° clockwise	075
90° clockwise	090
105° clockwise	105
120° clockwise	120
130° clockwise	130
150° clockwise	150
165° clockwise	165

Voltage:

24 V DC	24

Self locking feature (mandatory when selecting load version “H” or “M”):

No self locking required	0
Self locking for pull load	1
Self locking for push load	2

Options shown in italics are only available on demand. Contact SKF for more information on minimum quantities and additional costs.

Linear actuator CAR 22

Benefits

- Industrial reliable and robust actuator
- Right- and left-hand version



Suitable control units and accessories

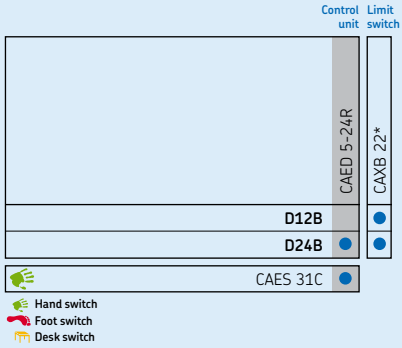

* See page 379

Connecting diagram

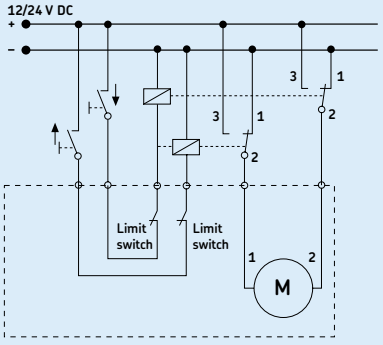

Dimensional drawing

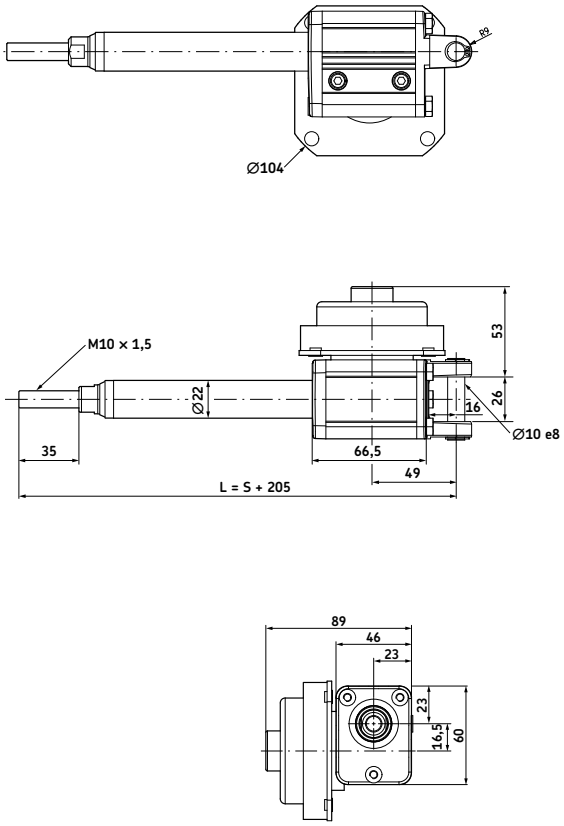

Legend:
S = stroke
L = retracted length

Technical data

		Unit	CAR 22
Rated push load		N	1 000 to 1 500
Rated pull load		N	1 000 to 1 500
Speed (full load to no load)		mm/s	10 to 30
Stroke		mm	50 to 300
Retracted length		mm	S+ 205
Voltage		V DC	12 or 24
Power consumption		W	N/A
Current consumption	12 V DC	A	9
	24 V DC	A	5
Duty cycle		%	25
Ambient temperature		°C	–20 to +70
Type of protection		IP	44
Weight		kg	1,2 to 1,6

Performance diagrams

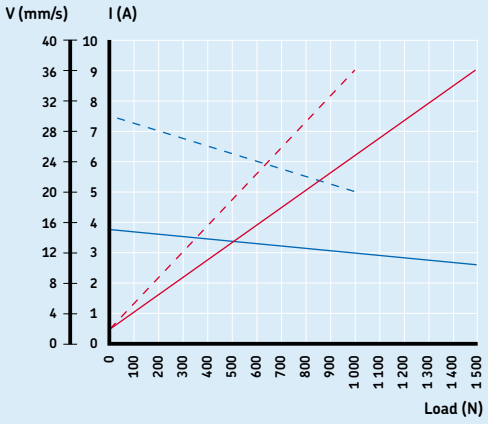

CAR 22.../D12B

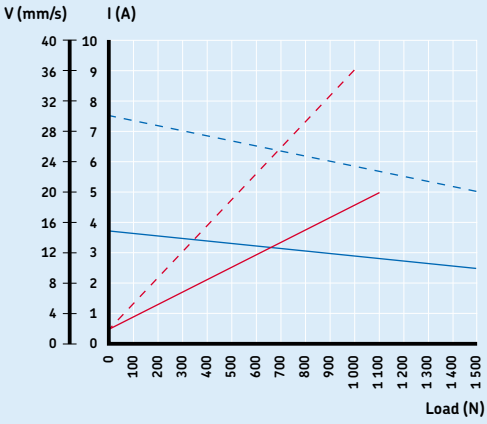

CAR 22.../D24B



Duty cycle

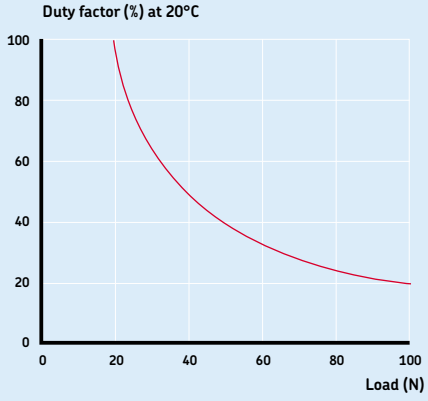

Ordering key

Dynamic load (N) / Speed (mm/s)		Motor options	
1 500/xx 1 500/15–10 1 500/15–10	1 000/xx 1 000/30–20 1 000/30–20	No motor 12 V DC, flat motor, IP44 24 V DC, flat motor, IP44	0000 D12B D24B
1	**2**		

C A R [ ] 2 2 X [ ] [ ] [ ] X [ ] / [ ] [ ] [ ] [ ]

Type

Motor assembly:
Right R
Left L

Stroke (S):
50 mm 050
100 mm 100
150 mm 150
200 mm 200
300 mm 300
Other stroke lengths - - -

Options shown in italics are only available on demand. Contact SKF for more information on minimum quantities and additional costs.

Linear actuator CAT 33H

Benefits

- Small
- Compact
- Robust
- Lubricated for service life
- High speed
- Modular
- Digital encoder feedback



Suitable control units and accessories

	Control units		Encoder
	CAED 5-24R	CAED 9-24R	E2[1]
C12C			●
D12C		●	●
C24C		●	●
C24CW	●		●
D24C		●	●
D24CB			●
D24CS		●	●
D24CW	●		●
CAES 31C	●	●	

Hand switch
Foot switch
Desk switch

[1] See page 380

Connecting diagram

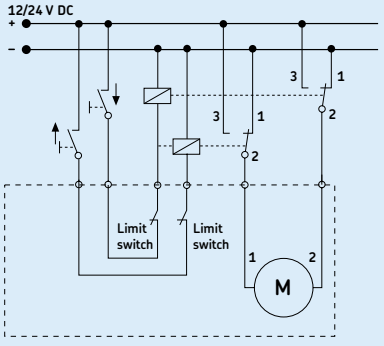

Dimensional drawing

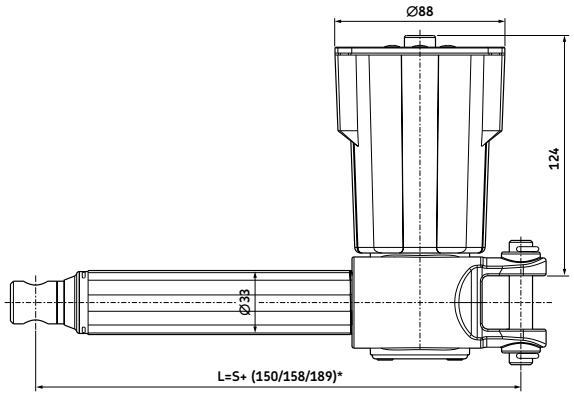

* Dimension depends on selected front attachment

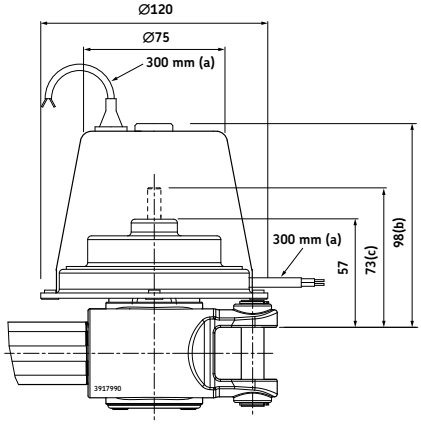

D12C, D24C, D24CB, D24CS, D24CW

Legend:
S = stroke
L = retracted length
(a) = cable length
(b) = cover for brake (D24CB)
(c) = extended shaft (D24CS)

See drawings of front and rear attachments and motor options on page 276.

Technical data

		Unit	CAT 33H
Rated push load		N	400 to 1 200
Rated pull load		N	400 to 1 200
Speed (full load to no load)		mm/s	17 to 193[1]
Stroke		mm	100 to 400
Retracted length		mm	S+150/158/189[2]
Voltage		V DC	12 or 24
Power consumption		W	N/A
Current consumption	12 V DC	A	18
	24 V DC	A	9
	24 V DC	A	5 (for motors C24CW and D24CW)
Duty cycle		%	20
Ambient temperature		°C	–20 to +50
Type of protection		IP	20/44/65
Weight		kg	2 to 2,7

[1] Depending on selected motor
[2] Dimension depends on selected front attachment

Performance diagrams

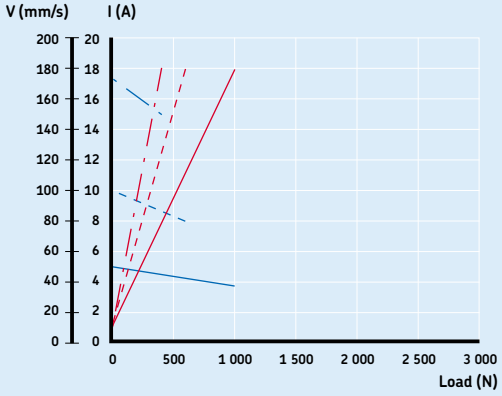

CAT 33H.../C12C

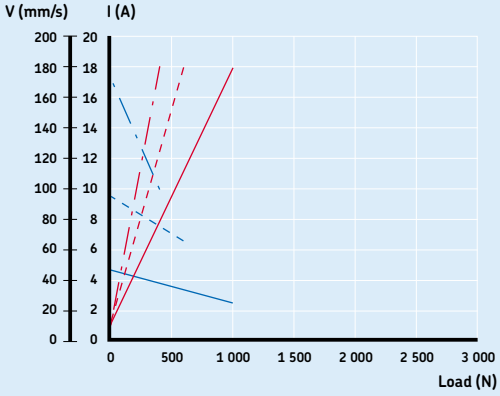

CAT 33H.../D12C

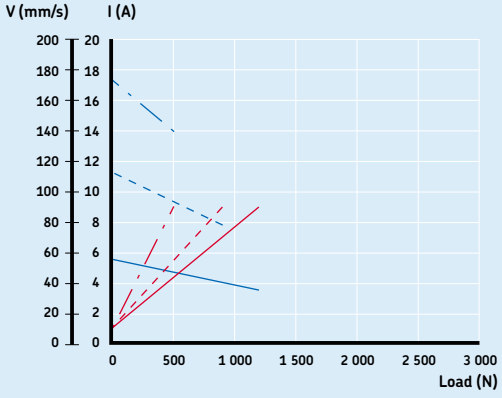

CAT 33H.../C24C

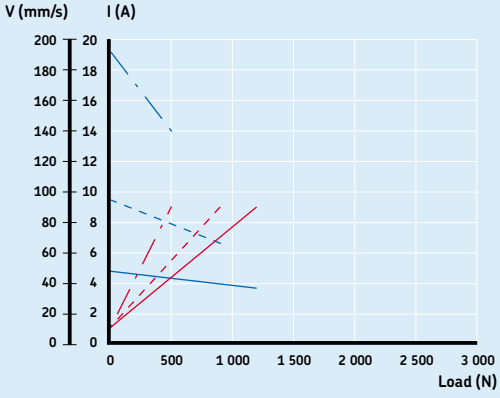

CAT 33H.../D24C/D24CB/D24CS

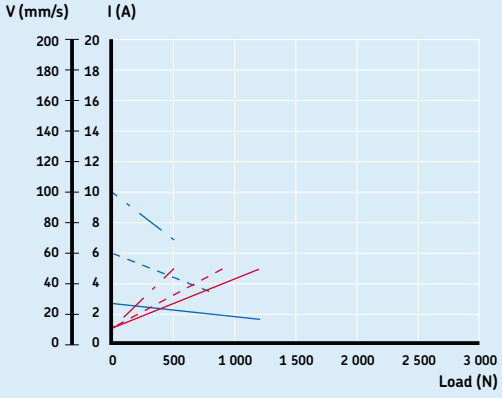

CAT 33H.../C24CW

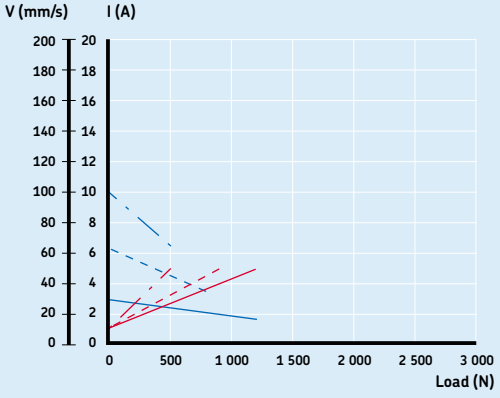

CAT 33H.../D24CW

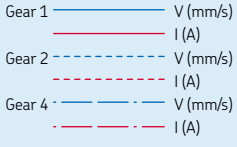

Ordering key

Dynamic load (N) / Speed (mm/s)			Motor options	
1 200/xx	900/xx	600/xx	No motor	0000
1 000/50–38	600/100–80	400/174–150	12 V DC, IP44 (65)	C12C
1 000/47–25	600/95–65	400/170–100	12 V DC, flat motor, IP44	D12C
1 200/56–36	900/113–79	500/174–140	24 V DC, IP44 (65)	C24C
1 200/27–17	800/60–35	500/100–69	24 V DC, low speed, IP44 (65)	C24CW
1 200/48–37	900/95–66	500/193–140	24 V DC, flat motor, IP44	D24C
1 200/48–37	900/95–66	500/193–140	24 V DC, flat motor, brake, IP20	D24CB
1 200/48–37	900/95–66	500/193–140	24 V DC, flat motor, ext. shaft, IP44	D24CS
1 200/30–17	800/63–35	500/100–65	24 V DC, flat motor, low speed, IP44	D24CW
1	**2**	**4**		

CAT □ 33HX □□□ X □□ □□ □□ □□ □ / □□□□□□ □□□

Type

Motor assembly:
Right R
Left L

Stroke (S):
100 mm 100
200 mm 200
300 mm 300
400 mm 400
Other stroke lengths - - -

Rear attachment (see page 276):
Fork ear, ∅=12,0 mm A1
Fork ear, ∅=12,7 mm A2
Single ear, ∅=12,0 mm K1
Single ear, ∅=12,7 mm K2

Front attachment (see page 276):
Hole, ∅=12,0 mm G1
Hole, ∅=12,7 mm G2
Male thread, M12 G3
Female thread, M12 G4
Fork ear, ∅=10,1 mm G5

Feedback:
No encoder (no code)
Encoder (for all standard motors) E2

Option:
Friction clutch (not available with option encoder) F
No friction clutch Z

Option for CxxC motors:
No cable U
EMC filter M
Motor without cover N
IP65 (mandatory to state type of cable T2 or T2P) I
Straight cable, 2,0 m, no plug T2
Straight cable, 2,0 m, jack plug T2P

Options shown in italics are only available on demand. Contact SKF for more information on minimum quantities and additional costs.

Linear actuator CAHB–10 series

Benefits

- ACME screw drive
- Extension tube (aluminium)
- Protection tube (aluminium)
- Zinc alloy gear housing
- Powder metal gears
- Self-locking



Connecting diagram

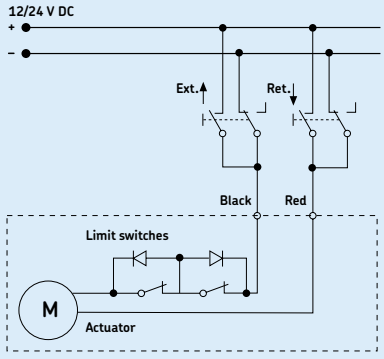

Dimensional drawing

Basic configuration

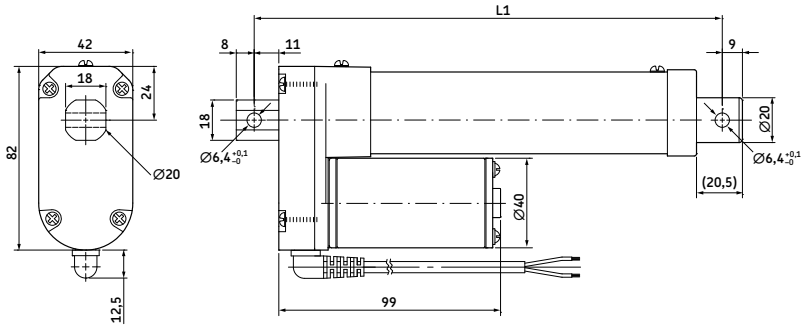

Legend:
L1 = retracted length

Stroke (mm)*	50	100	150	200	250	300
Retracted length (L1)	158	209	260	311	362	413

* Tolerance: S and L1: ± 2,0 mm

Technical data

		Unit	CAHB–10... 1	CAHB–10... 2	CAHB–10... 3	CAHB–10... 4	CAHB–10... 5
Rated push load		N	120	240	500	750	1 000
Rated pull load		N	120	240	500	750	1 000
Speed (full load to no load)		mm/s	45 to 56	24 to 30	13 to 16	8 to 10	6 to 8
Stroke		mm	50 to 300	50 to 300	50 to 300	50 to 300	50 to 300
Retracted length		mm	–*	–*	–*	–*	–*
Voltage		V DC	12 or 24	12 or 24	12 or 24	12 or 24	12 or 24
Power consumption		W	N/A	N/A	N/A	N/A	N/A
Current consumption	12 V DC	A	3,5	3,2	3,0	2,8	2,6
	24 V DC	A	2,2	2,0	1,8	1,8	1,6
Duty cycle		%	25	25	25	25	25
Ambient temperature		°C	–40 to +85	–40 to +85	–40 to +85	–40 to +85	–40 to +85
Type of protection		IP	66	66	66	66	66
Weight (at 300 mm stroke)		kg	1,5	1,5	1,5	1,5	1,5
Color		–	Silver	Silver	Silver	Silver	Silver

* see above table

Performance diagrams

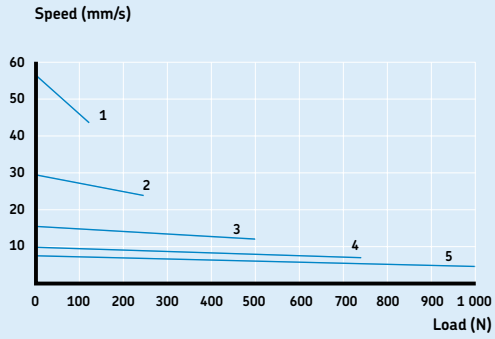

Speed-load diagram

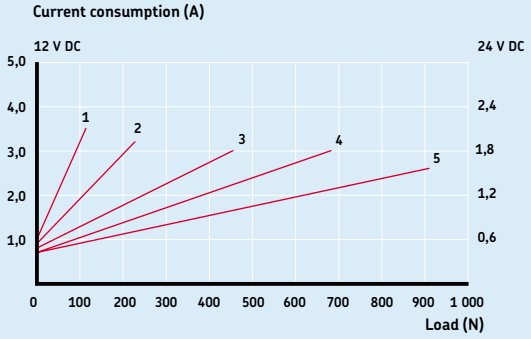

Current-load diagram

Dimensional drawing

Optional potentiometer

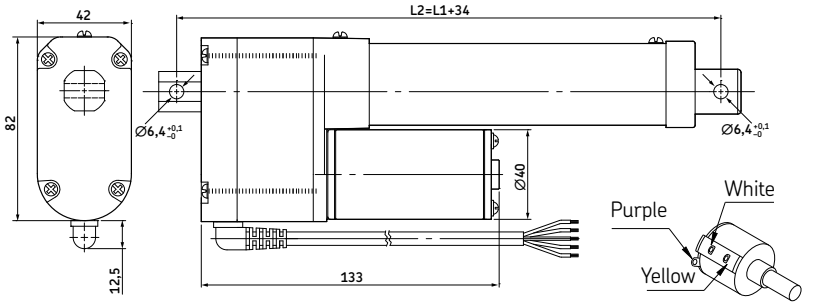

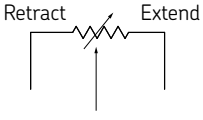

White	Purple	Yellow
0	CW	10K

Legend:
L1 and L2 = retracted length

Stroke (mm)*	**50**	**100**	**150**	**200**	**250**	**300**
Retracted length (L2)	192	243	294	345	396	447

* Tolerance: S and L2: ± 2,0 mm

Potentiometer resolution

Stroke (mm)	**50**	**100**	**150**	**200**	**250**	**300**
Ohm/mm	94,4	94,4	47,2	47,2	15,72	15,72

Ordering key

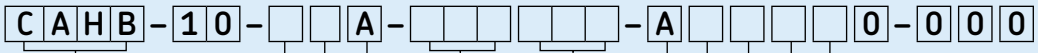

Type

Voltage:

12 V DC	A
24 V DC	B

Load:

120 N	1
240 N	2
500 N	3
750 N	4
1 000 N	5

Screw:

ACME screw	A

Stroke:

50 mm	050
100 mm	100
150 mm	150
200 mm	200
250 mm	250
300 mm	300

Retracted length:

Stroke	w/o POT*	with POT*
50 mm	158 mm	192 mm
100 mm	209 mm	243 mm
150 mm	260 mm	294 mm
200 mm	311 mm	345 mm
250 mm	362 mm	396 mm
300 mm	413 mm	447 mm

IP:

Standard (IP 66)	A

Front attachment:

Standard (hole: ∅= 6,4 mm)	A
Customized	*X*

Rear attachment:

Standard (hole: ∅= 6,4 mm)	A
Customized	*X*

Option 1:

None	0
Potentiometer	P

Option 2:

None	0
Thermal protection	T

Options shown in italics are only available on demand. Contact SKF for more information on minimum quantities and additional costs.

***** POT= Potentiometer

Linear actuator CALA 36A

Benefits

- Compact
- Lubricated for service life
- Corrosion resistant
- High operating reliability
- Selection of front attachments
- Limit switches as accessories



Suitable control units and accessories

	Control units						Limit switch
	VCU 5	VCU 8	VCU 9	BCU 5	BCU 8	CAED 3-24R	CAXC 33*
CALA 36A 12V							●
CALA 36A 24V	●	●	●	●	●	●	●
CAES 31C							●
EHA3	●	●	●	●	●		
STJ	●	●	●	●	●		
STE	●	●	●	●	●		

Hand switch
Foot switch
Desk switch

* See page 378

Connecting diagram

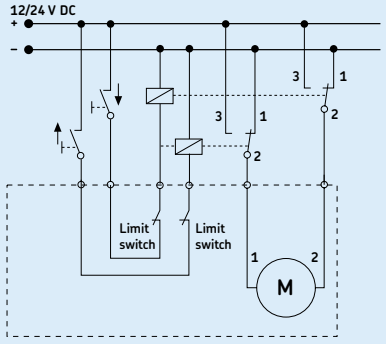

Dimensional drawing

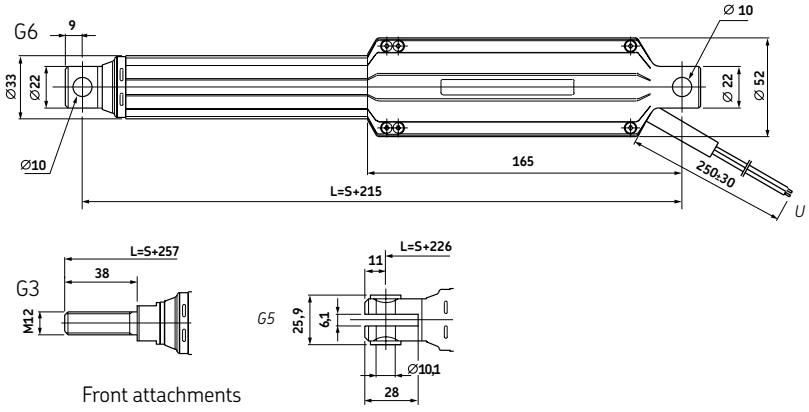

Front attachments

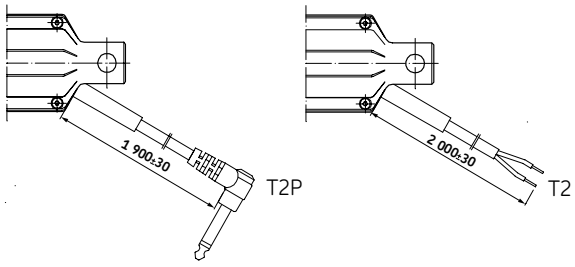

Rear attachments

Legend:
S = stroke
L = retracted length

Technical data

		Unit	CALA 36A
Rated push load		N	600
Rated pull load		N	600
Speed (full load to no load)		mm/s	17 to 31[1)]
Stroke		mm	50 to 200
Retracted length		mm	S+215/226/257[2)]
Voltage		V DC	12 or 24
Power consumption		W	N/A
Current consumption	12 V DC	A	4,4
	24 V DC	A	2,2
Duty cycle		%	5
Ambient temperature		°C	0 to +50
Type of protection		IP	44
Weight		kg	0,9 to 1,4
Color		–	Black

1) Depending on selected motor
2) Dimension depends on selected front attachment

Performance diagrams

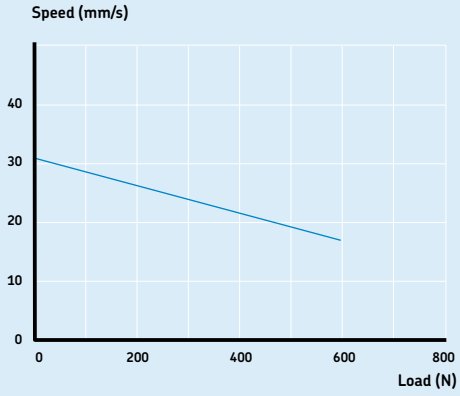

Speed-load diagram

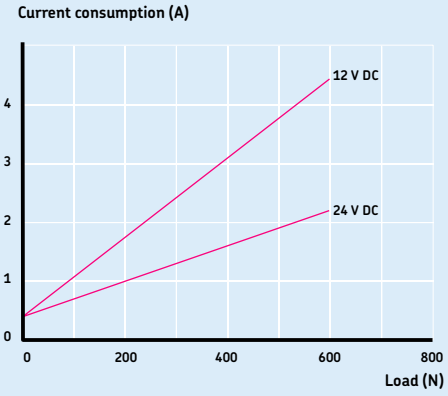

Current-load diagram

Ordering key

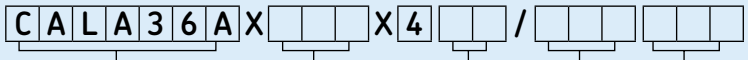

Type

Stroke (S):

50 mm	050
100 mm	100
150 mm	150
200 mm	200
Other stroke lengths	---

Front attachment:

Male thread, M12	G3
Fork end, ∅=10,1 mm	G5
Hole, ∅=10,0 mm	G6

Voltage:

12 V DC	D12
24 V DC	D24

Cable:

Straight 0,25 m, no plug	U
Straight 1,9 m, no plug	T2
Straight 1,9 m, jack plug	T2P
Straight, 2,5 m, DIN8 plug (for BCU/VCU)	C5

Options shown in italics are only available on demand. Contact SKF for more information on minimum quantities and additional costs.

Linear actuator CAT 21B

Benefits

- Compact design (efficient and cost effective)
- Ball screw technology
- High operating reliability
- Low energy consumption
- Lubricated for service life
- Corrosion resistant
- Silent operation
- Range of front and rear attachments



Suitable control units and accessories

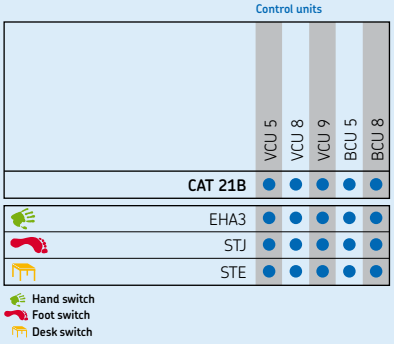

Connecting diagram

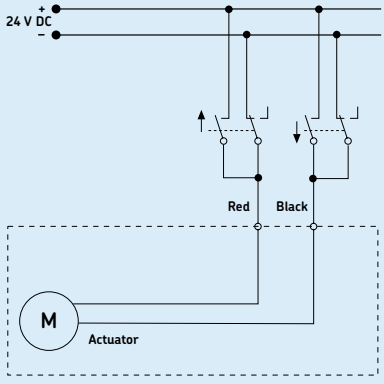

Dimensional drawing

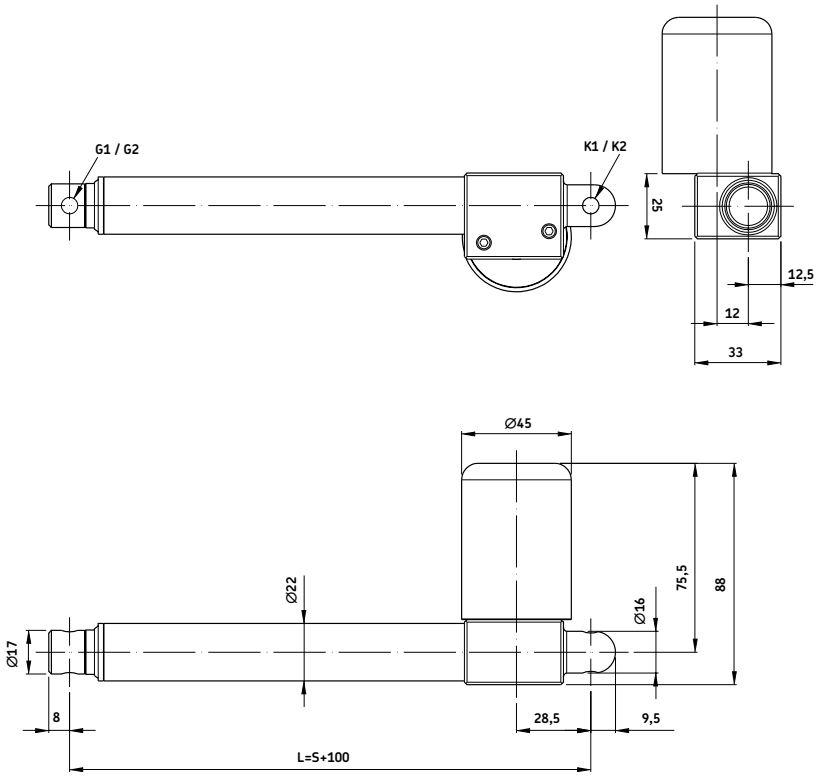

Legend:
S = stroke
L = retracted length

Technical data

	Unit	CAT 21B
Rated push load	N	600
Rated pull load	N	600
Speed (full load to no load)	mm/s	8,1 to 9,7
Stroke	mm	50 to 300
Retracted length	mm	S+100
Voltage	V DC	24
Power consumption	W	N/A
Current consumption	A	0,7
Duty cycle	%	see diagram on next page
Ambient temperature	°C	N/A
Type of protection	IP	×4
Weight	kg	0,7 to 1,5
Color	–	Black

Performance diagrams

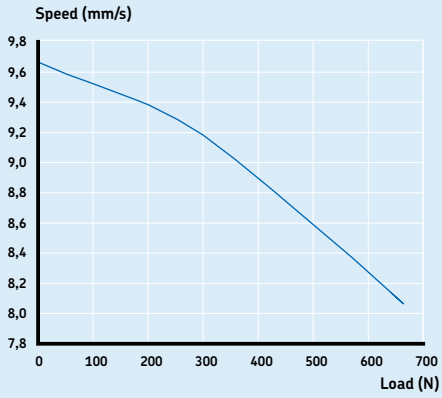

Speed-load diagram

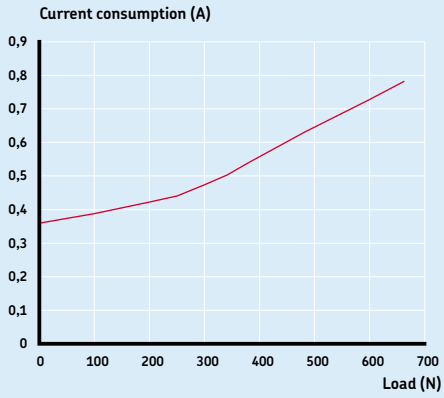

Current-load diagram

Duty factor diagram

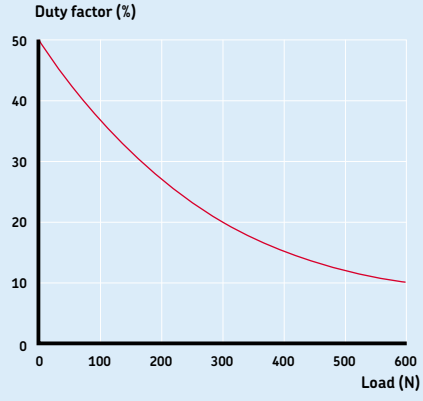

Ordering key

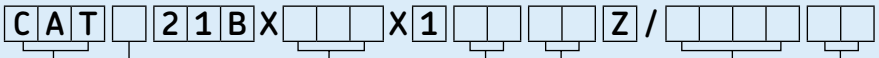

Type

Motor assembly:

Right	R
Left	L

Stroke (S):

50 mm	050
100 mm	100
200 mm	200
250 mm	250
300 mm	300
Other stroke lengths	---

Rear attachment:

Single ear, hole diameter 6,35 mm	K1
Single ear, hole diameter 8 mm	K2

Front attachment:

Hole diameter 6,35 mm	G1
Hole diameter 8 mm	G2

Motor option:

24 V DC	G24C

Cable option for motors:

Straight cable 610 mm, without plug	06
Straight cable 2500 mm, DIN8 plug	C5

Options shown in italics are only available on demand. Contact SKF for more information on minimum quantities and additional costs.

Options

Standard options	Customer options (available on request)
Right or left handed motor orientation. With or without motor cover.	Encoder and feedback options Adjustable or fixed position limit switches Special front and rear attachments Special colors and gear house engravings Special wiring and connectors Special lead screws and nut combinations 12 V DC motor in quantity of 100 pcs. or greater

If in any application there is a risk that the actuator mechanically runs into the end stop, we recommend that you use the limit switch option.

Detailed drawings of front and rear attachments for CAT and CAP43 and motor options for CAT

Front attachments and retracted length

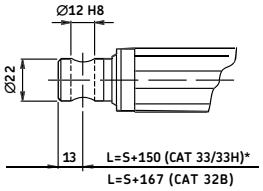

G1

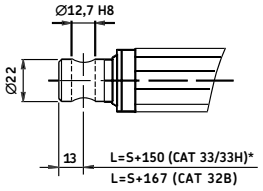

G2

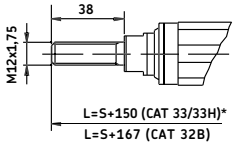

G3

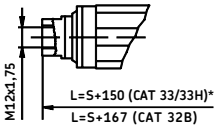

G4

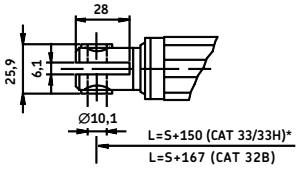

G5

Legend:
(a) = cable length
(b) = cover for brake
(c) = extended shaft
S = stroke
L = retracted length

*If S =400, add 50 mm to retracted length.

Motor options for CAT

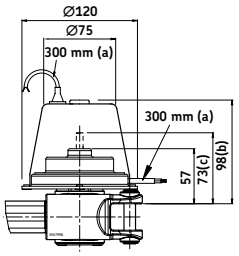

D12C, D24C, D24CB, D24CS, D24CW

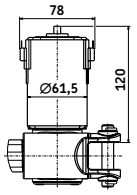

C12CN, C24CN, C24CWN

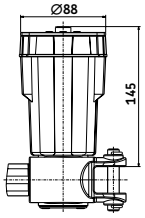

C12CM, C24CM, C24CWM

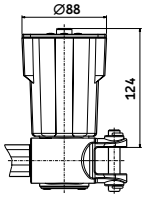

C12C, C24C, C24CW

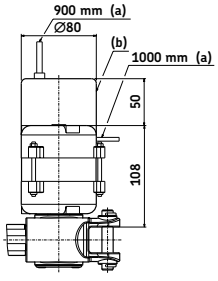

E110C, E110CB, E220C, E220CB

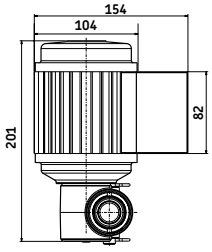

E380C

Rear attachments

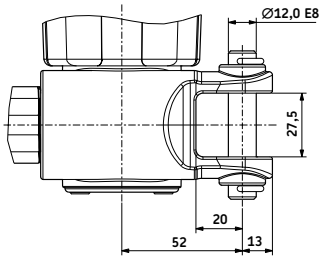

A1

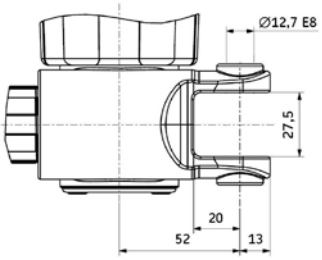

A2

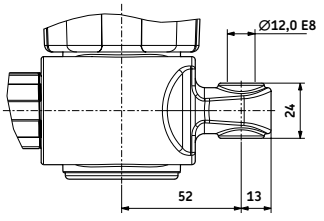

K1

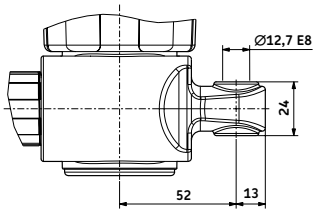

K2

Linear actuators - No motor

CARN 32 280

CCBR 32 284

Linear actuator CARN 32

Benefits

- Industrial reliable and robust actuator



Suitable accessories

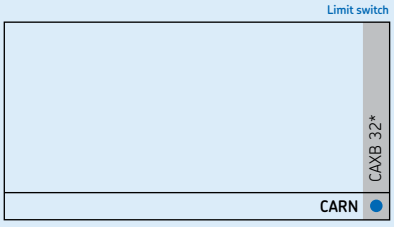

* See page 379

Dimensional drawing

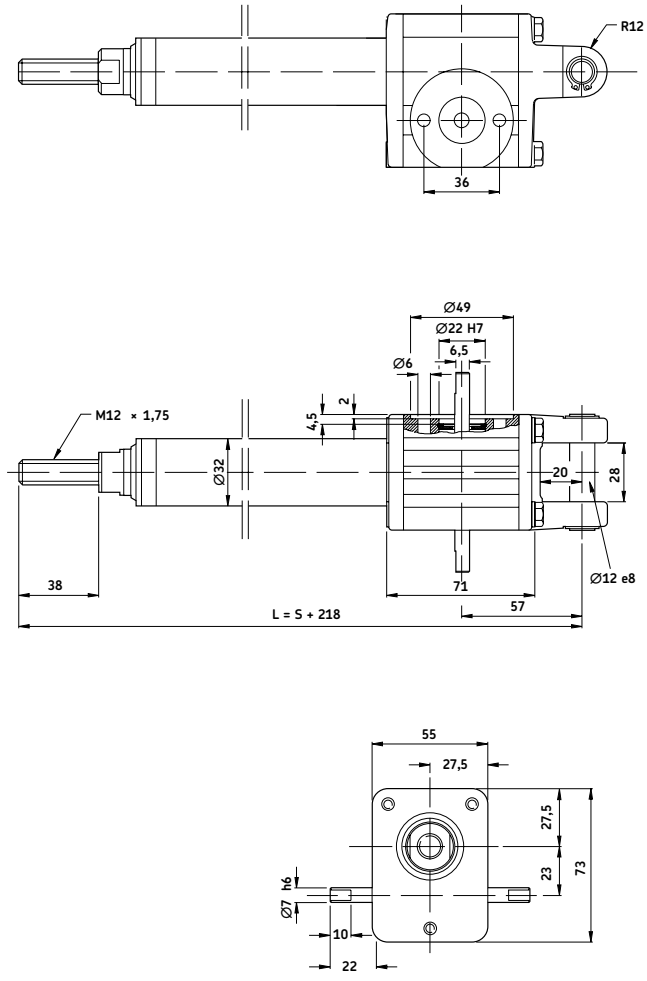

Legend:
S = stroke
L = retracted length

Technical data

	Unit	CARN 32
Rated push load	N	3 500
Rated pull load	N	3 500
Stroke	mm	50 to 700
Retracted length	mm	S+218
Ambient temperature	°C	–20 to +70
Weight	kg	0,8 to 3,3

Performance diagrams

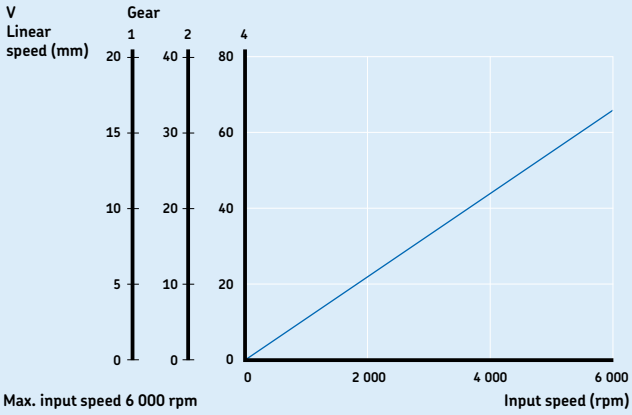

Linear speed “V” as a function of input speed

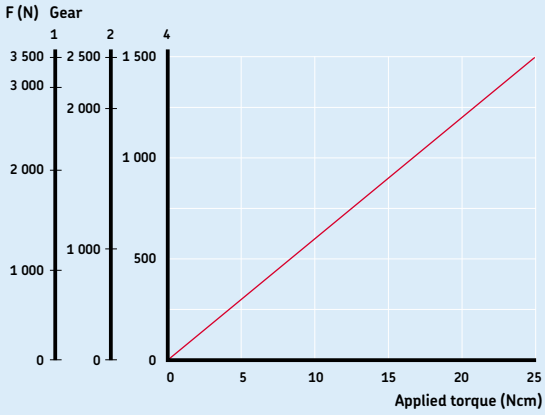

Available force “F” as a function of applied torque

Technical data

Designation type code	Gear ratio	Ball screw lead
	–	mm
CARN 32XSX1	1:25,0	4
CARN 32XSX2	1:12,5	4
CARN 32XSX4	1:6,25	4

Ordering key

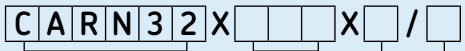

Type

Stroke (S):	
50 mm	050
100 mm	100
200 mm	200
300 mm	300
500 mm	500
700 mm	700
Other stroke lengths	- - -

Gear ratio:	
1:25	1
1:12,5 (max. load 2 500 N)	2
1:6,25 (max. load 1 500 N)	4

Option:	
Friction clutch	F
Back-up nut	S

Options shown in italics are only available on demand. Contact SKF for more information on minimum quantities and additional costs.

Linear actuator CCBR 32

Benefits

- Industrial reliable and robust actuator



Dimensional drawing

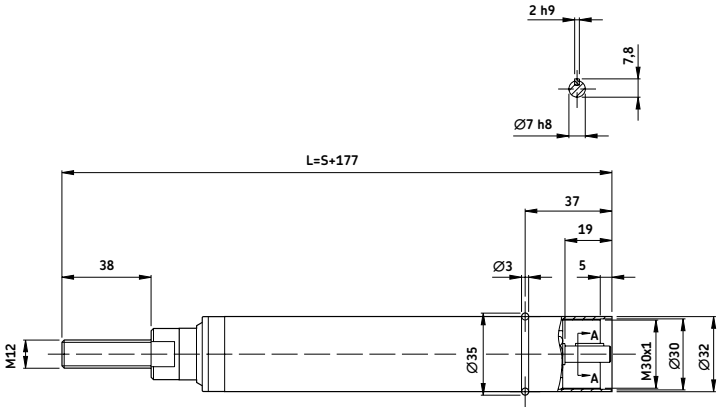

Legend:
S = stroke
L = retracted length

Technical data

	Unit	CCBR 32
Rated push load	N	2 500
Rated pull load	N	2 500
Stroke	mm	50 to 700
Retracted length	mm	S+177
Ambient temperature	°C	–20 to +70
Weight	kg	1,1 to 1,5

Performance diagrams

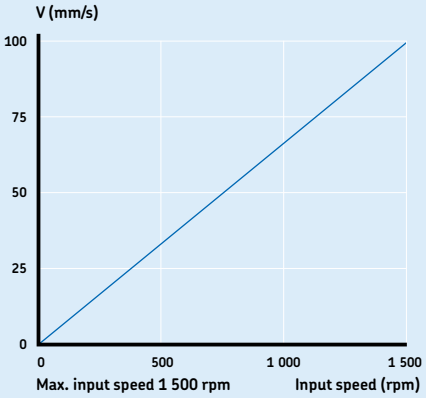

Linear speed “V” as a function of input speed

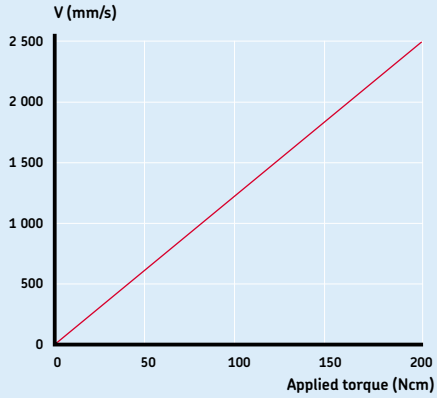

Available force “F” as a function of applied torque

Technical data

Designation type code	Max. dynamic load	Max. static load	Ball screw lead
	N	N	mm
CCBR 32XS	2 500	5 400	4

Ordering key

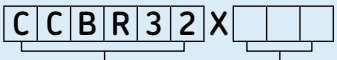

Type

Stroke (S):	
50 mm	050
100 mm	100
200 mm	200
300 mm	300
500 mm	500
700 mm	700
50<S<700 mm (S>700 mm contact SKF)	---

Options shown in italics are only available on demand. Contact SKF for more information on minimum quantities and additional costs.

Rotary actuators

CRAB 17 290

CRAB 05 296

Rotary actuator CRAB 17

Benefits

- Multiple output shafts
- Multiple motor options
- Small and compact



Dimensional drawing

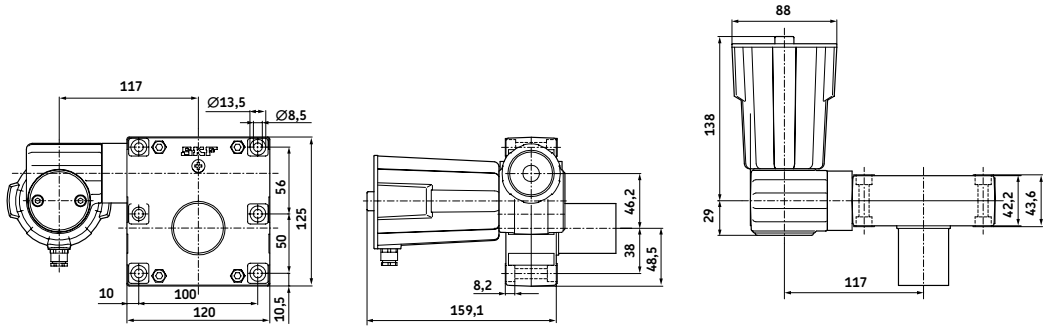

Standard shaft design

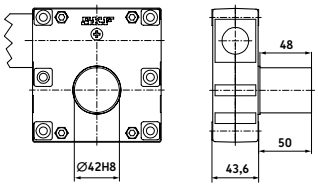

Type code 1: solid

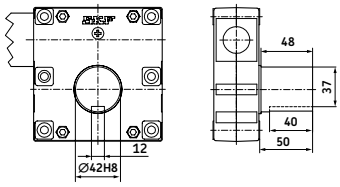

Type code 2: solid/keyway

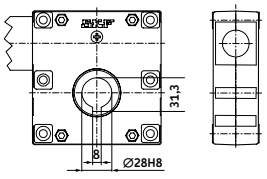

Type code 3: hollow/keyway

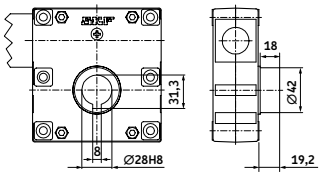

Type code 4: hollow/keyway for limit switch

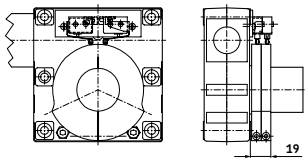

S - Limit switch unit

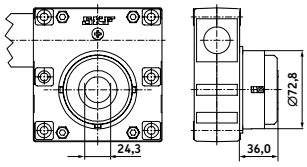

Type code 5: hollow/spines
Emergency manoeuvering, release on shaft (push) hollow shaft with splines

Motor design

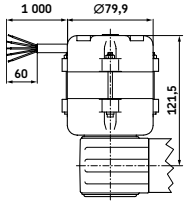

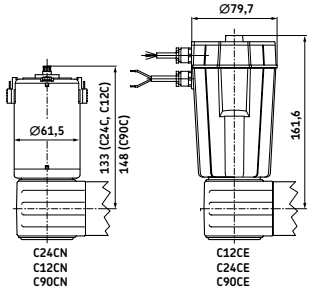

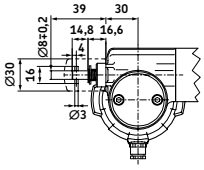

A - Emergency manoeuvering, gearhouse for hand crank

Technical data

	Unit	CRAB 17
Max. angular working range	–	∞
Max. angular speed (theoretical)	°/s	180
Efficiency factor	%	50
Max. axial load	N	5 000
Max. tilt moment	Nm	100
Backlash	°	±0,25
Start torque	Nm	≈0,3 Nm
Temperature range	°C	–20 to +60
Weight	kg	3

Performance diagrams

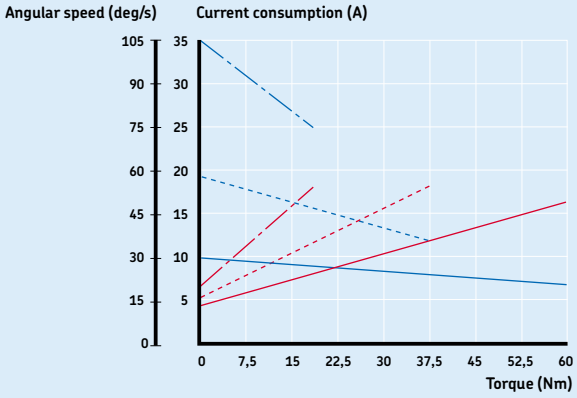

Diagram for motor C12C

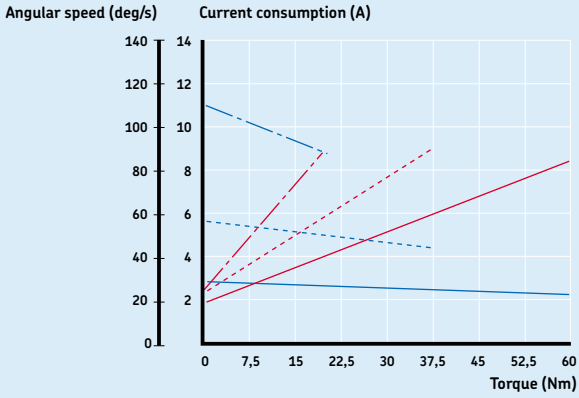

Diagram for motor C24C

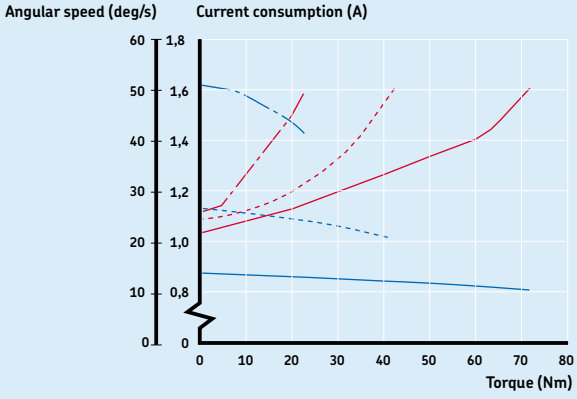

Diagram for motor E110C

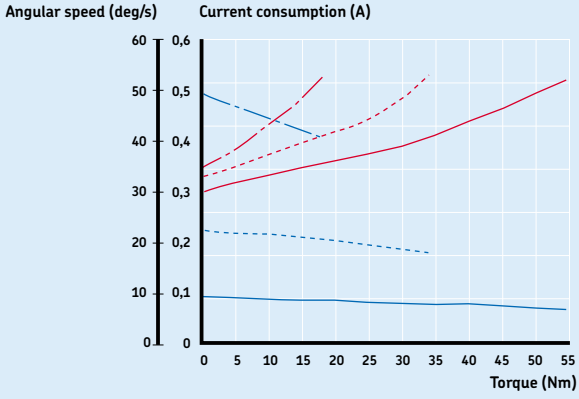

Diagram for motor E220C

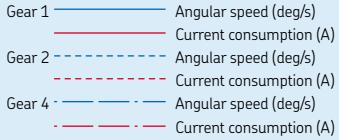

Ordering key

Dynamic load (Nm) /Speed (deg/s)			Motor options	
60/30 60/30 105/30 70/13 55/13	38/58 38/58 53/55 40/27 34/27	19/110 19/110 38/110 22/52 18/52	12 V DC 24 V DC 90 V DC 120 V AC/60 Hz 230 V AC/50 Hz	C12C C24C C90C E110C E220C
1	2	4		

CRAB17X□□X□□X□□/□□□□□□□

Type

Emergency manoeuvre:

None	–
Hand crank	A
Release on shaft (only with standard shaft N° 5)	B

Shaft design:

Solid	1
Solid / keyway	2
Hollow / keyway	3
Hollow / keyway for limit switch	4
Hollow / splines	5
Customer specification	6

Limit switch:

No	–
Yes (fits shaft N° 1, 2, 4 and 5)	S

Motor orientation:

Rear	R
Upwards	U
Front	F
Downwards	D

Motor assembly:

Right	R
Left	L

Option for CxxC motors:

No cable	–
Encoder	E2
Motor without cover	N
EMC filter	M
Straight, 2,0 m	T2
Jack plug, 2,0 m	T2P

Motor assembly

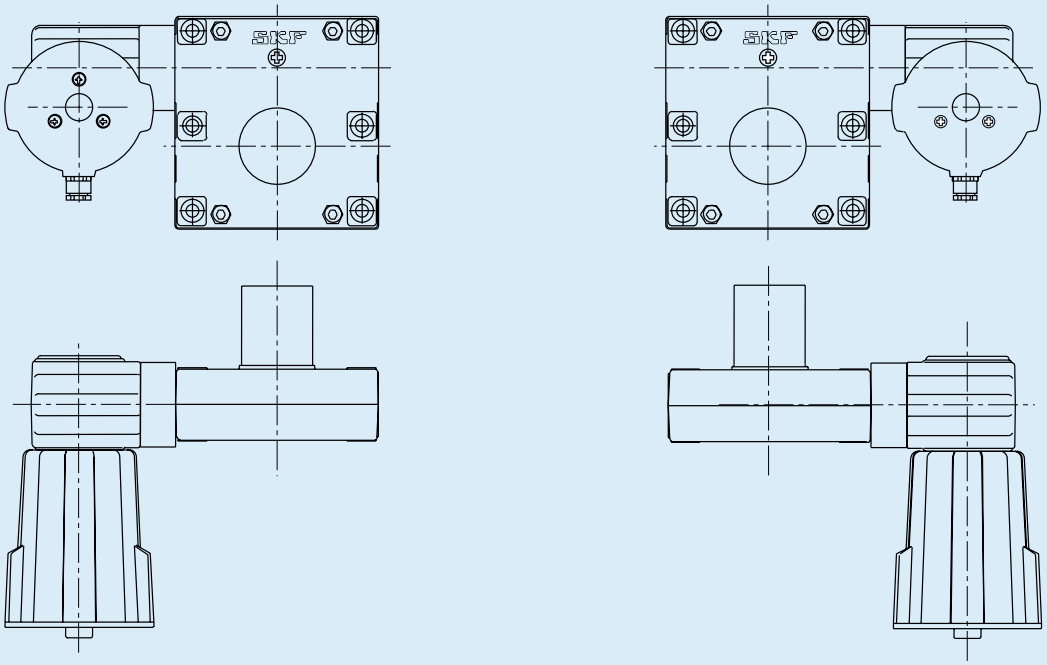

Left (L)

Right (R)

Motor direction

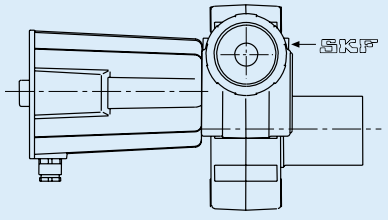

Rear (R)

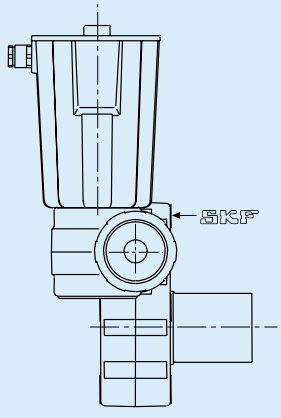

Upwards (U)

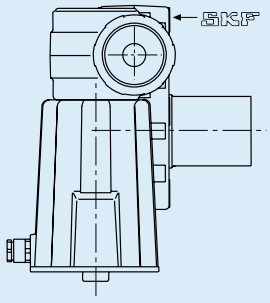

Downwards (D)

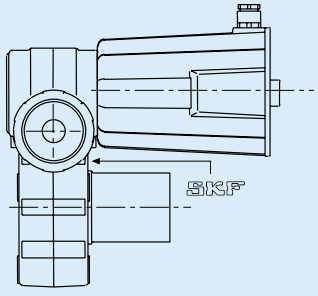

Front (F)

Rotary actuator CRAB 05

Benefits

- Multiple output shafts
- Multiple motor options
- Small and compact



Connecting shafts

SH

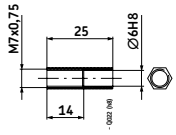

SD

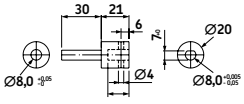

Dimensional drawing

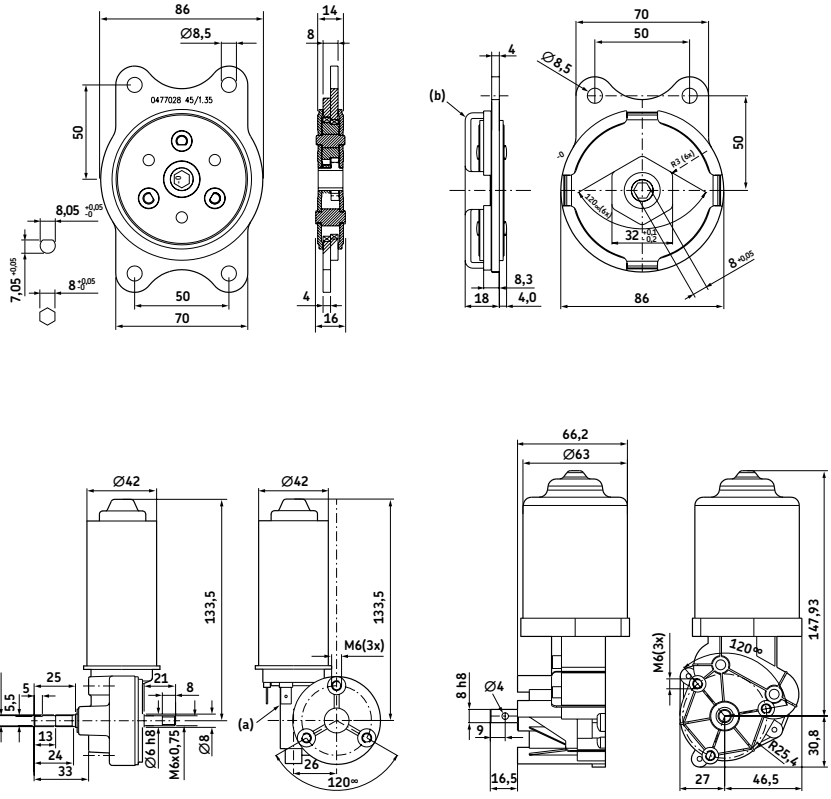

Motor MH

Motor MD

Legend:
(a) = Blade terminal 6,3 × 0,8 DIN 46244
(b) = Drive cross not fixed to gear. Hardened 45HRC

Technical data

	Unit	CRAB 05
Max. dynamic output torque	Nm	100
Max. dynamic input torque	Nm	4,4
Max. radial force	N	200
Efficiency	%	30 to 40
Service life 2×45° at 100 Nm		10 000 cycles at max. dynamic load
2×180° at 75 Nm		10 000 cycles at max. dynamic load
Duty factor at max. dynamic force	%	50
Gear ratio	–	56:1 or 57:1
Max. input speed	rpm	300
Maintenance	–	Lubricated for life
Temperature (environment)	°C	+5 to +40
Temperature (product)	°C	max. +70

Performance diagram

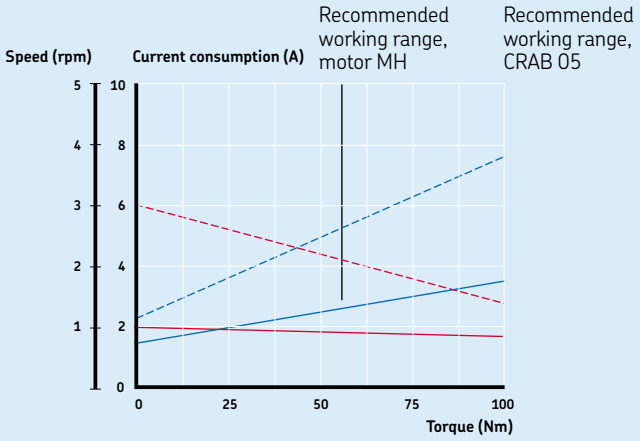

Values given at 20°C and with tolerances of ±20%.

Ordering key

C R A B 0 5 | | | | | | | | |

Type

Coating:
Black chromium-plated B
Natural chromium-plated C

Motor shaft connection:
D-hole D
Hexagonal hole H

Attachment/connection:
Outer connection ears (see Fig. A) E
Centre connection hexagonal 32 mm (see Fig.B only option “C” and “H”) S

Motors:
No motor 00
24 V DC for motor shaft connection “D” MD
24 V DC for motor shaft connection “H” MH

Connection shaft:
No shaft 00
D-shaft SD
Hexagonal shaft SH

4

Fig. A

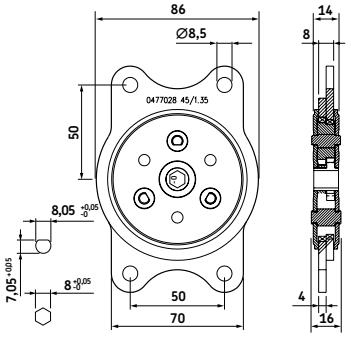

Fig. B

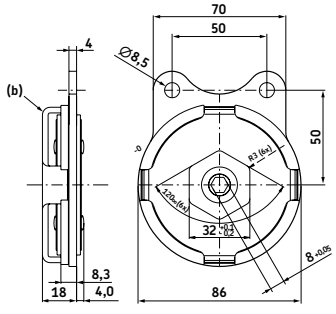



Control units

SCU 302
VCU 306
BCU 310
CB 314
MCU 316
LD 318
CAED ANR 322
CAED 324
CAEV 326

Control unit SCU

Benefits

- Compact 6-channel actuator control unit
- Single fault safety
- Overload and over-temperature protection
- Approved for medical applications
- Easy to clean
- Low standby current
- Remote control RS232



Suitable actuators, pillars and accessories

	Linear actuators					Pillars						
	Magdrive MD22, MD23	RU20, RU21, RU22	RU23, RU24, RU25	MAX 10, MAX 30	ECO4F, ECO5F, ECO8F, ECO9F	THG 10	TLG 10	TLT 10	TFG 10	EHA 3	STJ	STE
SCU 1	●	●	●	●	●	●	●	●	●	●	●	●
SCU 5	●	●	●	●	●	●	●	●	●	●	●	●
SCU 9	●	●	●	●	●	●	●	●	●	●	●	●

Hand switch
Foot switch
Desk switch

Dimensional drawing

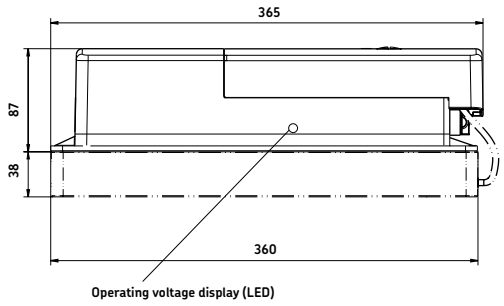

Connecting diagram

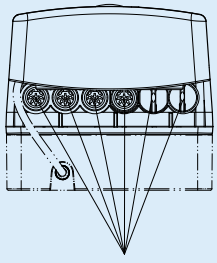

Up to 6 connections with DIN8 plug

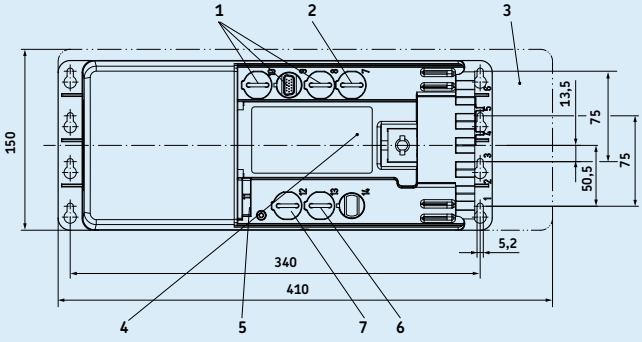

1. Three connections for HD15 operating devices
2. HD15 limit switch connection
3. Additional space for mounting
4. Data plate software
5. Mains connection
6 Communication interface (optional)
7. D-Sub 9 battery connection (optional)

Technical data

	Unit	SCU 1	SCU 5	SCU 9
Motor ports (DIN8)	#	6	3 or 6	3 or 6
Operating device ports (HD15)	#	3	3	3
Battery ports (DSub9)	#	1	1	1
Limit switch ports (HD15)	#	4	4	4
Single fault safety	yes/no	yes	yes	yes
Encoder processing	yes/no	yes	yes	yes
Input voltage	V	24 DC	120 AC	230 AC
Frequency	Hz	N/A	60	50
Input current (max)	A	30	6,5	3,3
Standby power	W	0,8	4,3	4,3
Output voltage	V DC	24	24	24
Output current (max)	A	30	18	18
Duty cycle: intermittent	min.	1 min./9 min.	1 min./9 min.	1 min./9 min.
Duty cycle: short time	min.	2	2	2
Ambient temperature	°C	+5 to +40	+5 to +40	+5 to +40
Humidity	%	5 to 85	5 to 85	5 to 85
Type of protection	IP	×4	×4	×4
Approvals	EN/UL	EN 60601–1 UL 60601–1	EN 60601–1 UL 60601–1	EN 60601–1 UL 60601–1
Weight without battery	kg	1,2	3,8	3,8
Weight with battery	kg	4,2	6,8	6,8

Pinning of HD15 limit switch connection

Function	Pin	Wire color (ZKA-160627-2500)
Switch 1	2	brown/green
Switch 2	4	red/blue
Switch 3	6	violet
Switch 4	8	red
24 V DC (com)	1, 3, 5, 7	white/yellow, white/green, grey/pink, black
Optional external power supply for binary outputs	9	blue
Binary output 1 (22-40 V DC/1 A)	10	pink
Binary output 2 (22-40 V DC/1 A)	11	grey
GND for binary outputs	12	yellow
20-24 V DC, max. 50 mA	13	green
5 V DC pulsed	14	brown
GND	15	white

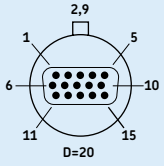

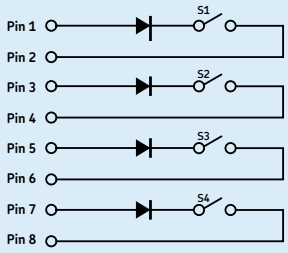

Accessories

	Plug	Designation	Order N°
Mains cable, 3 pole	Schuko	ZKA–160637–3500	M/0118821
Mains cable, 3 pole	SEV	ZKA–160638–3500	M/0118822
Mains cable, 3 pole	UL	ZKA–160639–3500	M/0105588
Mains cable, 3 pole	UK	ZKA–160609–3500	M/0105631
Mains cable, 3 pole	UL, hospital grade	ZKA–160640–3500	M/0118823
Battery pack 2,7 Ah		ZBA–160208–0400	M/0118806
Rack for 4,5 Ah battery		ZBA–160207–1000	M/0121266
Detachable battery 4,5 Ah		ZBA–160209	M/0119846

Ordering keys

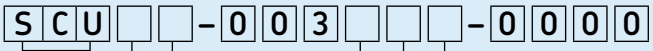

Type

SCU control unit

Voltage:
24 V DC (only for 6-channel version) 1
120 V AC, 60 Hz, class I 5
230 V AC, 50 Hz, class I 9

Number of channels:
3 channels 3
6 channels 6

Battery:
None (only for SCU16) 1
Prepared for mounting of battery 2

Transformer:
None (only for SCU16) 0
Standard (AC version) 3

Interface:
Without RS232 0
With RS232 (only for 6-channel version) 1

EACH SCU NEEDS A SCP



Type

SCU parameterization

Functionality:
All channels individually 11
Channel 2+1(+1+1+1) 21
Six (6) channel version 2+2+1+1 22
Three (3) channel version, all channels synchronously 30
Six (6) channel version 3+1+1+1 31
Six (6) channel version 4+1+1 41
Six (6) channel version, all channels synchronously 60
Trendelenburg T+1 (+1+1) T1

Actuators:

A	ECO4F, ECO5F	3,7 A	Actuator 1	–
C	TLT 10*	4,7 A	Actuator 2	–
E	TFG10, ECO8F, ECO9F	5,7 A	Actuator 3	–
M	MAX10, MAX30, TLG10, THG10	6,7 A	Actuator 4	–*
R	RU20, RU21, RU22	8,5 A	Actuator 5	–*
D	MD22, MD23	8,5 A	Actuator 6	–*
U	RU23, RU24, RU25	11,7 A		

* for SCUx3: insert zero

Softstart:
Hard, start 0 pulses, stop 0 pulses 0
Medium, start 12 pulses, stop 6 pulses 3

The SCU solution offers many more possibilities than those given in the type keys.
Please feel free to ask for more functions like "virtual limit switches", "external limit switches" and so on.

***** TLT is a 2-motor actuator. If simultaneous run is needed, SCP21-CC... is recommended

Control unit VCU

Benefits

- Compact 5-channel actuator control unit
- Single fault safety
- Overload and over-temperature protection
- Approved for medical applications
- Easy to clean
- Low standby current



Suitable actuators, pillars and accessories

	Linear actuators							Pillars							
	CALA 36A (24 V DC)	CARE 33A	Magdrive MD22, MD23	RU20, RU21, RU22	RU23, RU24, RU25	MAX 10, MAX 30	ECOMAG	THG 10	TLG 10	TLT 10	TFG 10	TXG 10	EHA 3	STJ	STE
VCU 5	●	●	●	●	●	●	●	●	●	●	●	●	●	●	●
VCU 8	●	●	●	●	●	●	●	●	●	●	●	●	●	●	●
VCU 9	●	●	●	●	●	●	●	●	●	●	●	●	●	●	●

Hand switch
Foot switch
Desk switch

Dimensional drawing

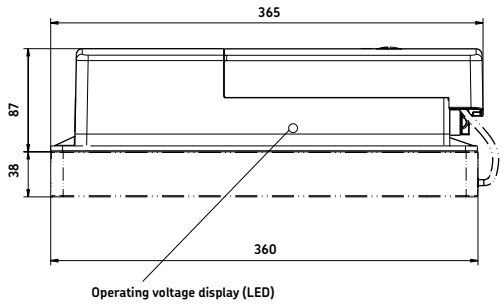

Connecting diagram

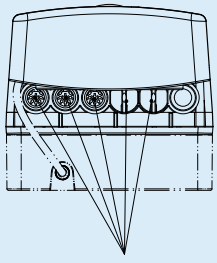

Up to 5 connections with DIN8 plug

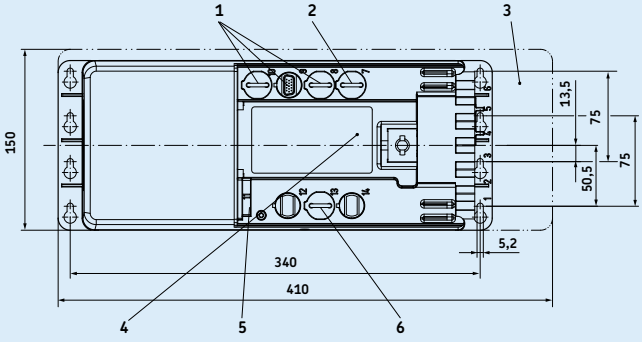

1. Two connections for HD15 operating devices
2. HD15 limit switch connection
3. Additional space for mounting
4. Data plate software
5. Mains connection
6. D-Sub 9 battery connection (optional)

Technical data

	Unit	VCU 5	VCU 8	VCU 9
Motor ports (DIN8)	#	3 or 5	3 or 5	3 or 5
Operating device ports (HD15)	#	2	2	2
Battery ports (DSub9)	#	1	1	1
Limit switch ports (HD15)	#	2	2	2
Single fault safety	yes/no	yes	yes	yes
Encoder processing	yes/no	no	no	no
Input voltage	V AC	120	230	230
Frequency	Hz	60	50	50
Input current (max)	A	2,5 resp. 6,5	1,3 resp. 3,3	1,3 resp. 3,3
Standby power	W	2,6 resp. 3,9	2,6 resp. 3,9	2,6 resp. 3,9
Output voltage	V DC	24	24	24
Output current (max)	A	7 resp. 18	7 resp. 18	7 resp. 18
Duty cycle: intermittent	min.	1 min./9 min.	1 min./9 min.	1 min./9 min.
Duty cycle: short time	min.	2	2	2
Ambient temperature	°C	+5 to +40	+5 to +40	+5 to +40
Humidity	%	5 to 85	5 to 85	5 to 85
Type of protection	IP	×4	×4	×4
Approvals	EN/UL	EN 60601-1 UL 60601-1	EN 60601-1 UL 60601-1	EN 60601-1 UL 60601-1
Weight without battery	kg	2,4 resp. 3,8	2,4 resp. 3,8	2,4 resp. 3,8
Weight with battery	kg	5,4 resp. 8,8	5,4 resp. 8,8	5,4 resp. 8,8

Pinning of HD15 limit switch connection

Function	Pin	Wire color (ZKA-160627-2500)	Connecting diagram
24 V DC (common)	1,3,5,7,9	white/yellow, white/green, grey–pink, black, blue	
Switch 1	2	brown–green	
Switch 2	4	red–blue	
NC	6,8,10,11,12,14	violet, red, pink, grey, yellow, brown	
20–40 V DC, max. 50 mA	13	green	
GND	15	white	

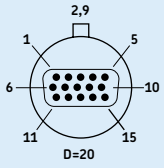

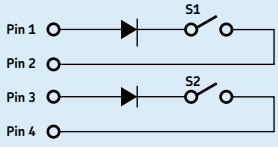

Accessories

	Plug	Designation	Order N°
Mains cable, 2 pole	Euro	ZKA–160608–3500	M/0105726
Mains cable, 3 pole	Schuko	ZKA–160637–3500	M/0118821
Mains cable, 3 pole	SEV	ZKA–160638–3500	M/0118822
Mains cable, 3 pole	UL	ZKA–160639–3500	M/0105588
Mains cable, 3 pole	UK	ZKA–160609–3500	M/0105631
Mains cable, 3 pole	UL, hospital grade	ZKA–160640–3500	M/0118823
Battery pack 2,7 Ah		ZBA–160208–0400	M/0118806
Rack for 4,5 Ah battery		ZBA–160207–1000	M/0121266
Detachable battery 4,5 Ah		ZBA–160209	M/0119846

Ordering keys

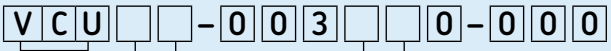

Type

VCU control unit

Voltage:
120 V AC, 60 Hz, class I 5
230 V AC, 50 Hz, class II 8
230 V AC, 50 Hz, class I 9

Number of channels:
3 channels 3
5 channels 5

Option 1:
No option (only VCU×3) 1
Prepared for mounting of battery 2

Transformer:
7 A tranformer 1
18 A transformer (for 5-channel version only) 3

EACH VCU NEEDS A VCP

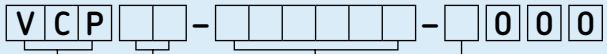

Type

VCU parameterization

Functionality:
All channels individually 11
2 channels simultaneously + 1 or 3 individually 21
2 + 2 channels simultaneously + 1 individually 22
All channels simultaneously, only 3-channel version 30
4 channels simultaneously + 1 individually, only 5-channel version 41
All channels simultaneously, only 5-channel version 50
Trendelenburg (2 channels) + 1 or 3 individually T1

Actuators:

A	CALA 36A (24V DC), ECO2, ECO3, ECO4, ECO5	3,7 A	Actuator 1	-
C	CARE 33A, TLT10*, TXG10 (EXG)	4,7 A	Actuator 2	-
E	TFG, ECO6, ECO7, ECO8, ECO9	5,7 A	Actuator 3	-
M	MAX10, MAX30, TLG10, THG10	6,7 A	Actuator 4	-*
R	RU20, RU21, RU22	8,5 A	Actuator 5	-*
D	MD22, MD23	8,5 A		
U	RU23, RU24, RU25	11,7 A		

* for VCU×3: insert zero

Softstart:
Hard= start 0 ms, stop 0 ms 0
Medium= start 400 ms, stop 200 ms 3

***** TLT is a 2-motor actuator. If simultaneous run is needed, VCP21-CC... is recommended

Control unit BCU

Benefits

- Compact 3-channel actuator control unit
- Single fault safety
- Overload and over-temperature protection
- Approved for medical applications
- Easy to clean
- Low standby current



Suitable actuators, pillars and accessories

	Linear actuators						Pillars								
	CALA 36A (24 V DC)	CARE 33A	Magdrive MD22, MD23	RU20, RU21, RU22	MAX 10, MAX 30	ECOMAG	THG 10	TLG 10	TLT 10	TFG 10	TXG 10	EHA 3	STJ	STE
BCU 5	●	●	●	●	●	●	●	●	●	●	●	●	●	●
BCU 8	●	●	●	●	●	●	●	●	●	●	●	●	●	●

Hand switch
Foot switch
Desk switch

Connecting diagram

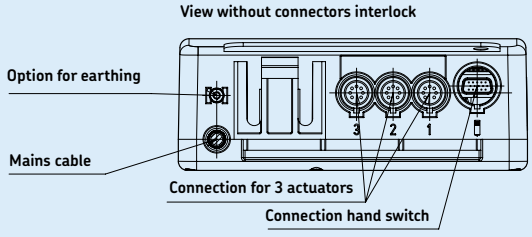

Dimensional drawing

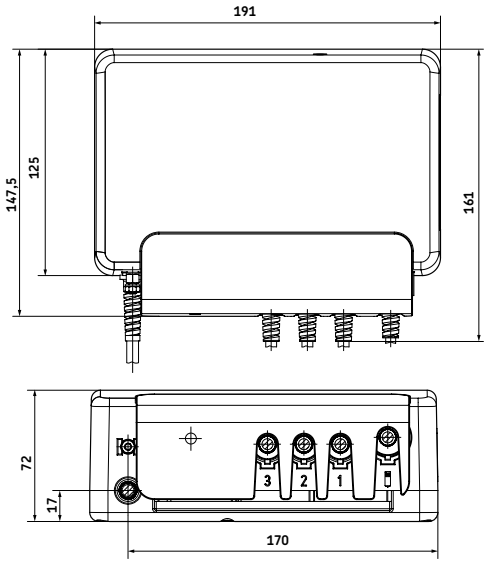

Technical data

	Unit	BCU 5	BCU 8
Motor ports (DIN8)	#	3	3
Operating device ports (HD15)	#	1	1
Battery ports	#	0	0
Limit switch ports	#	0	0
Single fault safety	yes/no	yes	yes
Encoder processing	yes/no	no	no
Input voltage	V AC	120	230
Frequency	Hz	60	50
Input current (max)	A	2,5	1,3
Standby power	W	1,2	1,5
Output voltage	V DC	24	24
Output current (max)	A	7	7
Duty cycle: intermittent	min.	1 min./9 min.	1 min./9 min.
Duty cycle: short time	min.	2	2
Ambient temperature	°C	0 to +40	0 to +40
Humidity	%	5 to 85	5 to 85
Type of protection	IP	×4	×4
Approvals	EN/UL	EN 60601-1 UL 60601-1	EN 60601-1 UL 60601-1
Weight	kg	2,3	2,3

Ordering keys

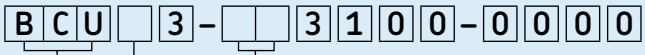

Type

BCU control unit

Voltage:
120 V AC, 60 Hz, class I 5
230 V AC, 50 Hz, class II 8

Mains power supply cable:
Class II, straight 3,5 m, 2-pole plug, EU (for voltage type 8) 2J
Class II, straight 3,5 m, 2-pole plug, UK (for voltage type 8) 2H
Class I, straight 3,5 m, 3-pole plug, UL (for voltage type 5) 2L

EACH BCU NEEDS A BCP

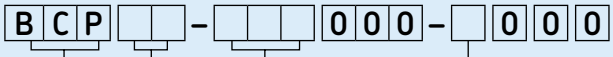

Type

BCU parameterization

Functionality:
All channels individually 11
Channel 2+1 21
All channels simultaneously 30
Trendelenburg T1

Motors:

A	CALA 36A (24V DC), ECO2, ECO3, ECO4, ECO5	3,7 A	Actuator 1	–
C	CARE 33A, TLT10*, TXG10 (EXG)	4,7 A	Actuator 2	–
E	TFG, ECO6, ECO8, ECO9	5,7 A	Actuator 3	–
M	MAX10, MAX30, THG10, TLG10	6,7 A		
R	RU20, RU21, RU22	8,5 A		
D	MD22, MD23	8,5 A		

Soft start/stop:
Hard, start 0 ms, stop 0 ms 0
Medium, start 400 ms, stop 200 ms 3

***** TLT is a 2-motor actuator. If simultaneous run is needed, BCP21-CC... is recommended

Control unit CB

Benefits

- Compact design
- Controls up to 3 actuators



Suitable actuators and accessories

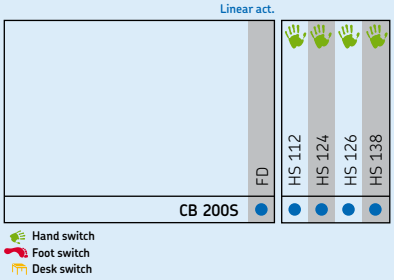

Dimensional drawing

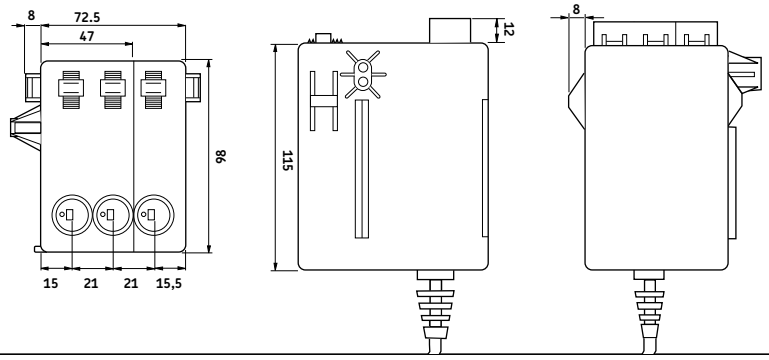

Connecting diagram

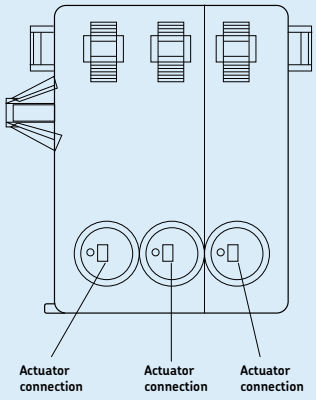

Technical data

	Unit	CB200S
Motor ports	#	3
Operating device ports	#	1 or 3
Battery ports	#	0
Limit switch ports	#	0
Single fault safety	yes/no	yes
Encoder processing	yes/no	no
Input voltage	V AC	100-240
Frequency	Hz	50/60
Input current (max)	A	N/A
Standby power	W	N/A
Output voltage	V DC	24
Output current (max)	A	3
Duty cycle: intermittent	min. on/off	N/A
Duty cycle: short time	min on	N/A
Ambient temperature	°C	N/A
Humidity	%	N/A
Type of protection	IP	51
Approvals	EN/UL	CE:EM/2004/30130 UL:E208367
Weight	kg	1,5

Ordering key

CB200-S-□-□□□

Type

Number of actuators:

1	1
2	2
3	3

Voltage (V AC):

100	100
110–115	120
230	230
240	240

Control unit MCU

Benefits

- Suitable for mobile applications
- LED indication for battery charge level
- Audible signal for low charge condition



Suitable actuators, pillars and accessories

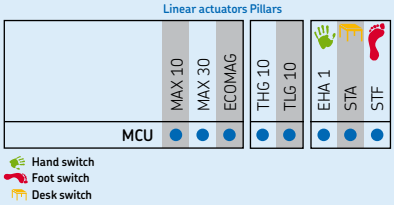

Dimensional drawing

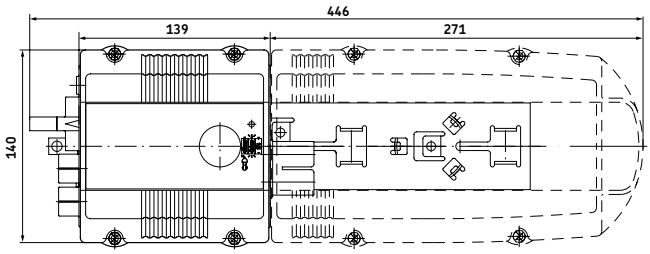

Connecting diagram

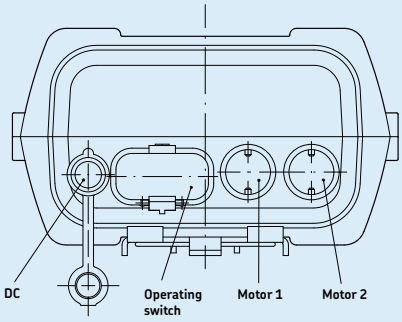

Technical data

	Unit	MCU
Motor ports (Jack)	#	2
Operating device ports (DSub9)	#	1
Battery ports	#	1
Limit switch ports	#	0
Single fault safety	yes/no	no
Encoder processing	yes/no	no
Input voltage	V DC	28
Frequency	Hz	N/A
Input current (max)	A	0,5
Standby power	W	N/A
Output voltage	V DC	24
Output current (max)	A	9,5
Duty cycle: intermittent	min.	1 min./9 min.
Duty cycle: short time	min.	N/A
Ambient temperature	°C	+10 to +40
Humidity	%	85
Type of protection	IP	×4
Approvals	EN/UL	EN 60601–1/EN 60601–1–2/ UL 2601/EN ISO 10535
Weight	kg	4,9

Ordering key

MCU1 □ – 003 □□□ – 0000

Type

Number of channels:

1 channel	1
2 channels	2

Option:

Current cut-off 6 A	000
Current cut-off 9 A	EXP
Current cut-off 6 A, electric emergency lowering of channel 1	EYE
Current cut-off 9 A, electric emergency lowering of channel 1	2AT
Individual current cut-off 6 A (only for 2-channel version)	EYR

Accessories

	Plug	Designation	Order N°
Battery unit 4,5 Ah		ZBA–142211	M/0126153
Mains adapter 230 V AC	Euro	ZDV–142331–2500	M/0100009
Mains adapter 120 V AC	UL	ZDV–142332–2500	M/0100060
Wall charging station		ZLA–142221	M/0126159
Tool for connectors (Jack/D–Sub/Mains)		ZWS–140375	M/0125322

Control unit LD–014

Benefits

- Synchronized movement of 4 actuators possible
- Drive comfort
- Intelligent System Protection (ISP) - anti-pinching



Suitable pillars and accessories

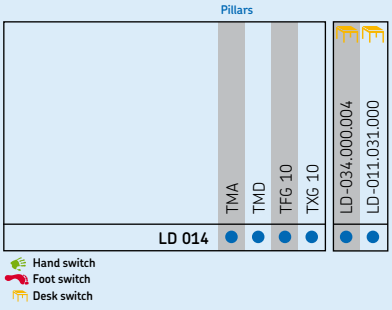

Dimensional drawing

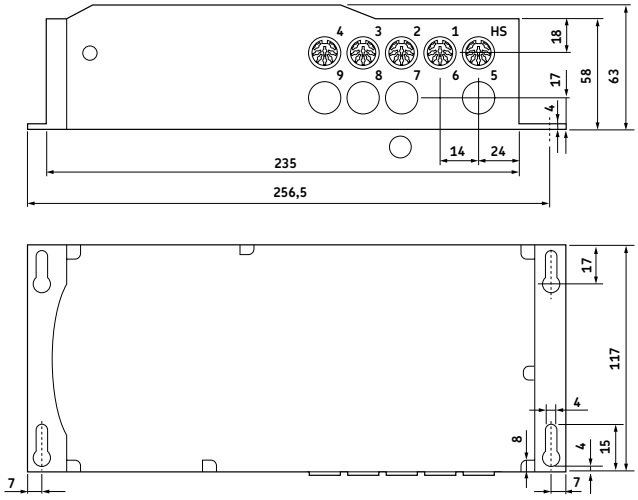

Connecting diagram

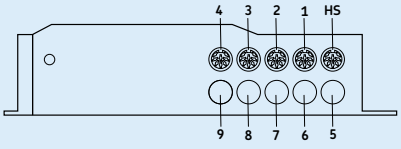

1. Connection to actuator 1
2. Connection to actuator 2
3. Connection to actuator 3
4. Connection to actuator 4

HS. Connection to desk switch

Technical data

		Unit	LD–014
Motor ports (DIN8)		#	4
Operating device ports (DIN7)		#	1
Battery ports		#	0
Limit switch ports (FCC)		#	1
Single fault safety		yes/no	no
Encoder processing		yes/no	yes
Input voltage		V AC	120 or 230
Frequency		Hz	60 or 50
Input current (max)	120 V AC	A	6
	230 V AC	A	2,5
Standby power		W	1
Output voltage		V DC	24
Output current (max)		A	11
Duty cycle: intermittent		min.	1 min./9 min.
Duty cycle: short time		min.	N/A
Ambient temperature		°C	+5 to +45
Humidity		%	5 to 85
Type of protection		IP	20
Approvals		EN/UL	EN 60335-1
Weight		kg	2,5

Product ordering keys

	TMA	TMD	TFG	TXG
230 V AC				
4 actuators	LD–014.208.000	LD–014.208.200	LD–014.177.100	LD–014.178.000
2+2 actuators	LD–014.176.200	LD–014.176.100	LD–014.176.600	
120 V AC				
4 actuators	LD–014.208.100	LD–014.208.300	LD–014.177.200	LD–014.178.500
2+2 actuators	LD–014.176.400	LD–014.176.300	LD–014.176.700	

Control unit LD–015

Benefits

- Synchronized movement of 3 actuators possible
- Drive comfort
- Intelligent System Protection (IPS) - anti-pinch



Suitable pillars and accessories

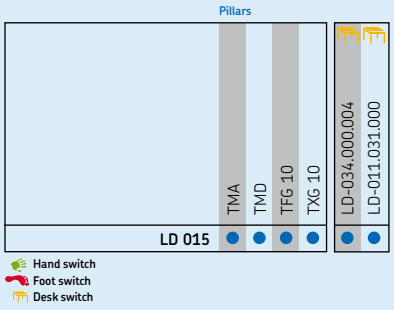

Dimensional drawing

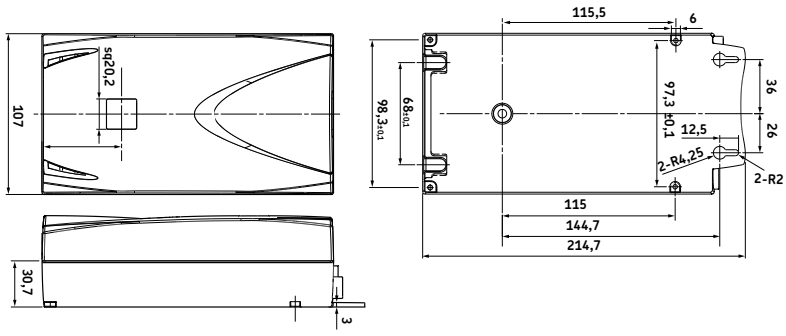

Connecting diagram

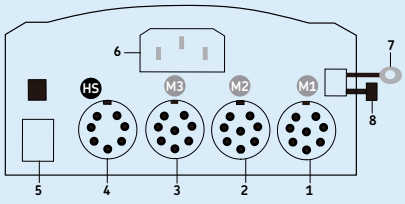

1. Connection to actuator 1 (M1)
2. Connection to actuator 2 (M2)
3. Connection to actuator 3 (M3)
4. Connection to desk switch (HS)
5. Connection to squeeze line
6. Mains supply
7. Cable plug for grounding the desk frame (optional)
8. Connector for mains cut-off (optional)

Technical data

		Unit	LD–015	LD–015
Motor ports (DIN8)		#	3	2
Operating device ports (DIN7)		#	1	1
Battery ports		#	0	0
Limit switch ports (FCC)		#	1	1
Single fault safety		yes/no	no	no
Encoder processing		yes/no	yes	yes
Input voltage		V AC	120 or 230	120 or 230
Frequency		Hz	60 or 50	60 or 50
Input current (max)	120 V AC	A	6	6
	230 V AC	A	2,5	2,5
Standby power		W	1,1	1,1
Output voltage		V DC	24	24
Output current (max)		A	11	9
Duty cycle: intermittent		min.	1 min./9 min.	1 min./9 min.
Duty cycle: short time		min.	N/A	N/A
Ambient temperature		°C	+5 to +45	+5 to +45
Humidity		%	5 to 85	5 to 85
Type of protection		IP	20	20
Approvals		EN/UL	EN 60335-1	EN 60335-1
Weight		kg	2,2	1,9

Product ordering keys

230 V AC	**TMA**	**TMD**	**TFG**	**TXG**
1 actuator	LD–015.342.000	LD–015.343.000	LD–015.357.100	
2 actuators	LD–015.342.200	LD–015.343.200	LD–015.357.000	LD–015.255.000
3 actuators	LD–015.342.400	LD–015.343.400	LD–015.357.400	LD–015.258.000

120 V AC	**TMA**	**TMD**	**TFG**	**TXG**
1 actuator	LD–015.342.100	LD–015.343.100	LD–015.357.300	
2 actuators	LD–015.342.300	LD–015.343.300	LD–015.357.200	LD–015.255.500
3 actuators	LD–015.342.500	LD–015.343.500	LD–015.357.500	LD–015.258.500

Control unit CAED ANR

Benefits

- Compact potentiometer control unit
- Electronic overload protection
- LED indication for overload cut out
- Easy installation via front screw terminal



Suitable actuators

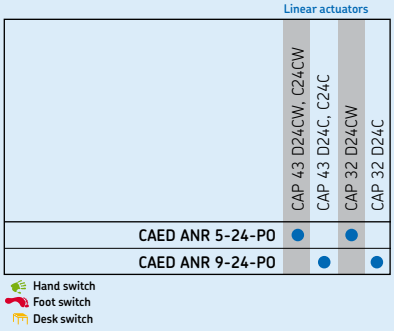

Dimensional drawing

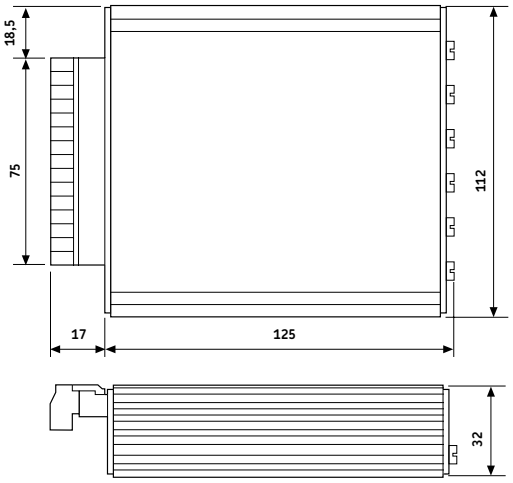

Connecting diagram

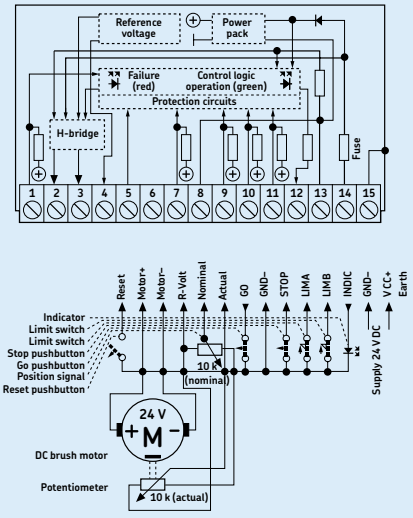

RESET comander always NO contacts
LIMIT comander always NO contacts
LIMIT comander must be installed depend upon the motor revolution direction
Motor revolution direction depend on the polarity of nominal and actual value

Technical data

	Unit	CAED ANR 5–24R–PO	CAED ANR 9–24R–PO
Motor ports	#	1	1
Operating device ports	#	1	1
Battery ports	#	0	0
Limit switch ports	#	1	1
Single fault safety	yes/no	no	no
Analogical processing	yes/no	yes	yes
Input voltage	V DC	22 – 28	22 – 28
Frequency	Hz	N/A	N/A
Input current (max)	A	10	10
Standby power	W	N/A	N/A
Output voltage	V DC	24	24
Output current (max)	A	5	10
Duty cycle: intermittent	min. on/off	2 min./8 min.	2 min./8 min.
Duty cycle: short time	min on	N/A	N/A
Ambient temperature	°C	0 to +50	0 to +50
Humidity	%	N/A	N/A
Type of protection	IP	40	40
Approvals	EN/UL	N/A	N/A
Weight	kg	0,36	0,36

Product ordering keys

CAED ANR 5–24R–PO
CAED ANR 9–24R–PO

Control unit CAED

Benefits

- Compact ON/OFF control unit
- Supply voltage 24 V DC
- Output voltage 24 V DC
- Electronic overload protection
- LED indication for overload cut out
- Easy installation via front screw terminal



Suitable actuators and accessories

	CAR 24 V DC	CAT 24 V DC	CALA 36A 24 V DC	CARE 33 24 V DC	CAES 31 C
CAED 3-24R			●		●
CAED 5-24R	●	●		●	●
CAED 9-24R	●	●			●

Connecting diagram

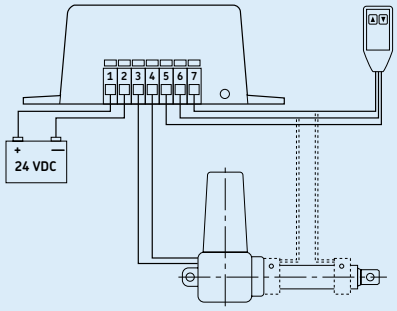

Dimensional drawing

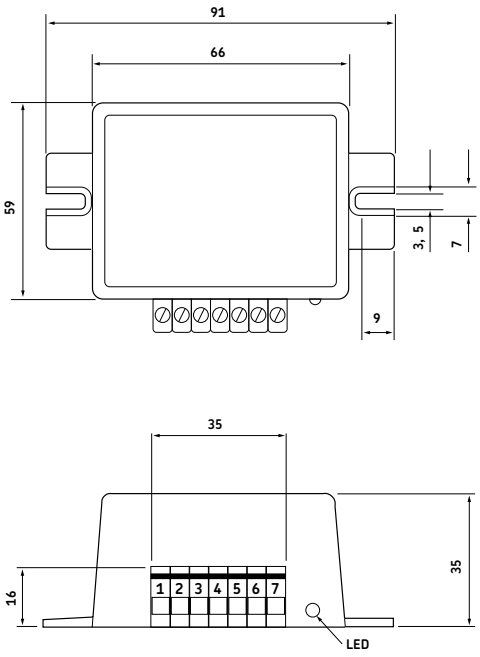

Technical data

	Unit	CAED 3–24R	CAED 5–24R	CAED 9–24R
Motor ports	#	1	1	1
Operating device ports	#	1	1	1
Battery ports	#	0	0	0
Limit switch ports	#	1	1	1
Single fault safety	yes/no	no	no	no
Encoder processing	yes/no	no	no	no
Input voltage	V DC	22 – 29	22 – 29	22 – 29
Frequency	Hz	N/A	N/A	N/A
Input current (max)	A	N/A	N/A	N/A
Standby power	W	stand by current <30 mA	stand by current <30 mA	stand by current <30 mA
Output voltage	V DC	24	24	24
Output current (max)	A	3	5	9
Duty cycle: intermittent	min.	2 min./8 min.	2 min./8 min.	2 min./8 min.
Duty cycle: short time	min.	2	2	2
Ambient temperature	°C	0 to +50	0 to +50	0 to +50
Humidity	%	N/A	N/A	N/A
Type of protection	IP	31	31	31
Approvals	EN/UL	EN 50081–1 EN 50082–1 EN 60601–1–2	EN 50081–1 EN 50082–1 EN 60601–1–2	EN 50081–1 EN 50082–1 EN 60601–1–2
Weight	kg	0,2	0,2	0,2

Product ordering keys

CAED 3–24R
CAED 5–24R
CAED 9–24R

Control unit CAEV

Benefits

- Reliable pc board for single phase AC motors
- Can be used with both 120 V AC or 230 V AC
- Low voltage signal through cable handset
- Built-in option for limit switches
- Built-in option for thermal protection
- Easy installation via front screw terminals
- Compact design

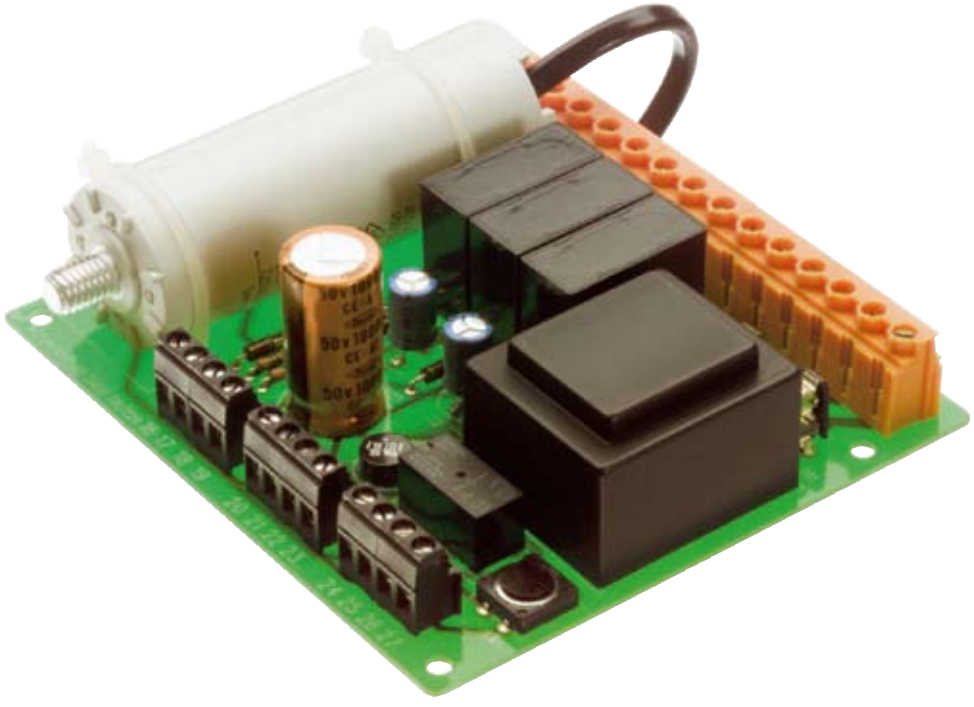

Suitable actuators and accessories

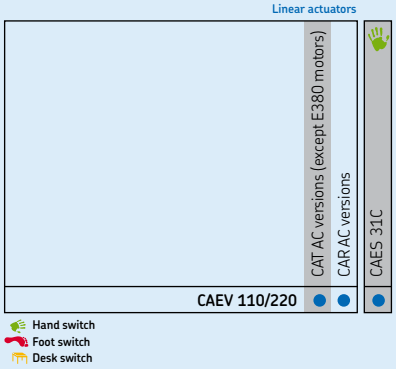

Connecting diagram*

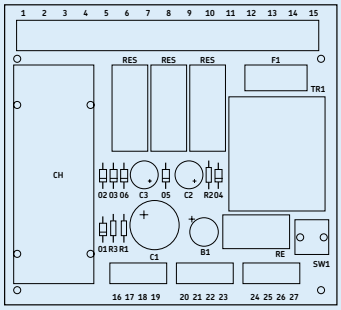

* See next page for details

Dimensional drawing

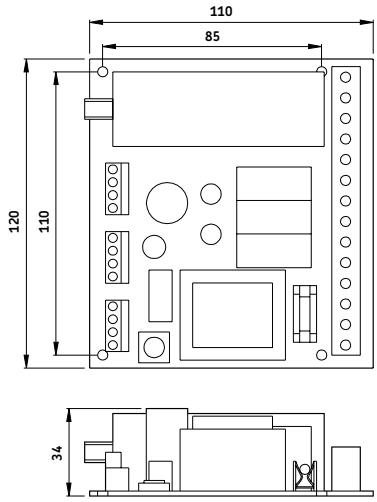

Technical data

	Unit	CAEV 110/220
Motor ports	#	1
Operating device ports	#	1
Battery ports	#	0
Limit switch ports	#	1
Single fault safety	yes/no	no
Encoder processing	yes/no	no
Input voltage	V AC	120 or 230
Frequency	Hz	50/60
Input current (max)	A	N/A
Standby power	W	<15 VA
Output voltage	V AC	120 or 230
Output current (max)	A	N/A
Duty cycle: intermittent	min.	up to 100 %
Duty cycle: short time	min.	N/A
Ambient temperature	°C	0 to +50
Humidity	%	N/A
Type of protection	IP	N/A
Approvals	EN/UL	N/A
Weight	kg	0,4

* See duty factor diagram of relevant actuator

Product ordering key

CAEV 110/220

Connecting diagram

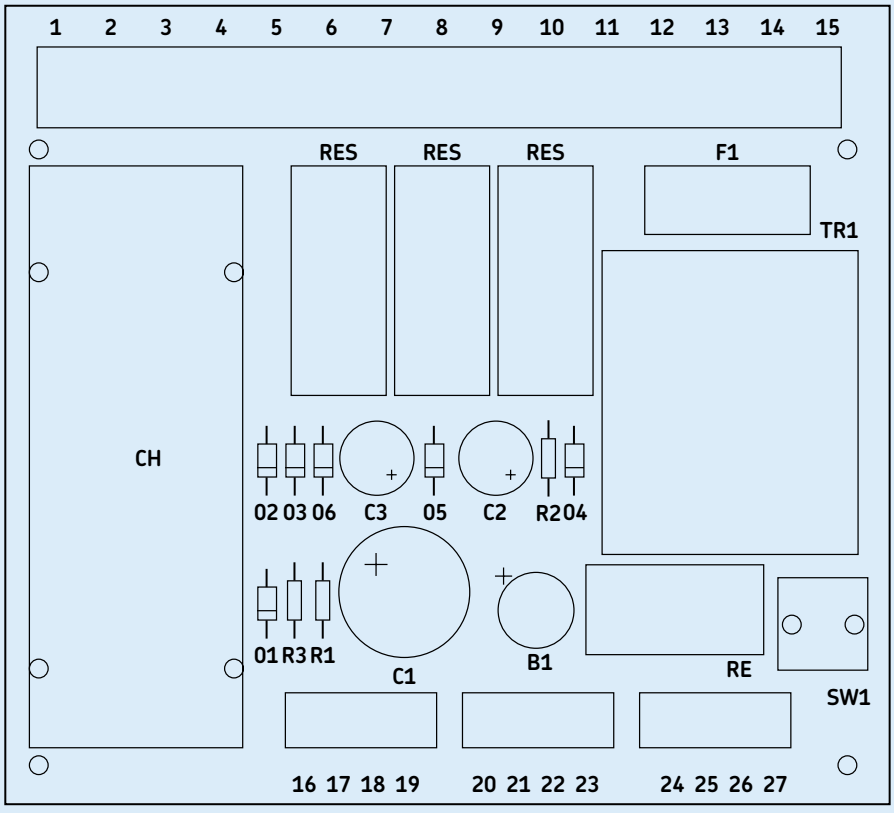

Terminal No.	Connections at 230 V AC	Connections at 120 V AC
1	net supply, phase	net supply, phase, short-circuit to terminal 3
2	net supply, phase, including fuse on p.c. board	net supply, phase, including fuse on p.c. board
3	short-circuit to terminal 4	short-circuit to terminal 1
4	short-circuit to terminal 3	short-circuit to terminal 5
5	net supply, zero	net supply, zero, short-circuit to terminal 4
6	ground	ground
7	motor: green/yellow wire	motor: green/yellow wire
8	motor: braun wire	motor: braun wire
9	motor: black wire (only motor with brake)	motor: black wire (only motor with brake)
10	motor: blue wire	motor: blue wire
11	motor: white wire	motor: white wire
12	start capacitor, replace if needed, see table 2	start capacitor, install correct capacitor, see table 2
13	start capacitor	start capacitor
14	motor: red wire, thermal switch, see note 1	motor: red wire, thermal switch, see note 1
15	motor: red wire, thermal switch, see note 1	motor: red wire, thermal switch, see note 1
16	limit switch, outer, see note 2 and 4	limit switch, outer, see note 2 and 4
17	limit switch, outer, see note 2 and 4	limit switch, outer, see note 2 and 4
18	limit switch, inner, see note 2 and 4	limit switch, inner, see note 2 and 4
19	limit switch, inner, see note 2 and 4	limit switch, inner, see note 2 and 4
20	op. device, outwards movement, see note 3 and 4	op. device, outwards movement, see note 3 and 4
21	op. device, outwards movement, see note 3 and 4	op. device, outwards movement, see note 3 and 4
22	op. device, inwards movement, see note 3 and 4	op. device, inwards movement, see note 3 and 4
23	op. device, inwards movement, see note 3 and 4	op. device, inwards movement, see note 3 and 4
24	no connection	no connection
25	no connection	no connection
26	external reset button, if wanted	external reset button, if wanted
27	external reset button, if wanted	external reset button, if wanted

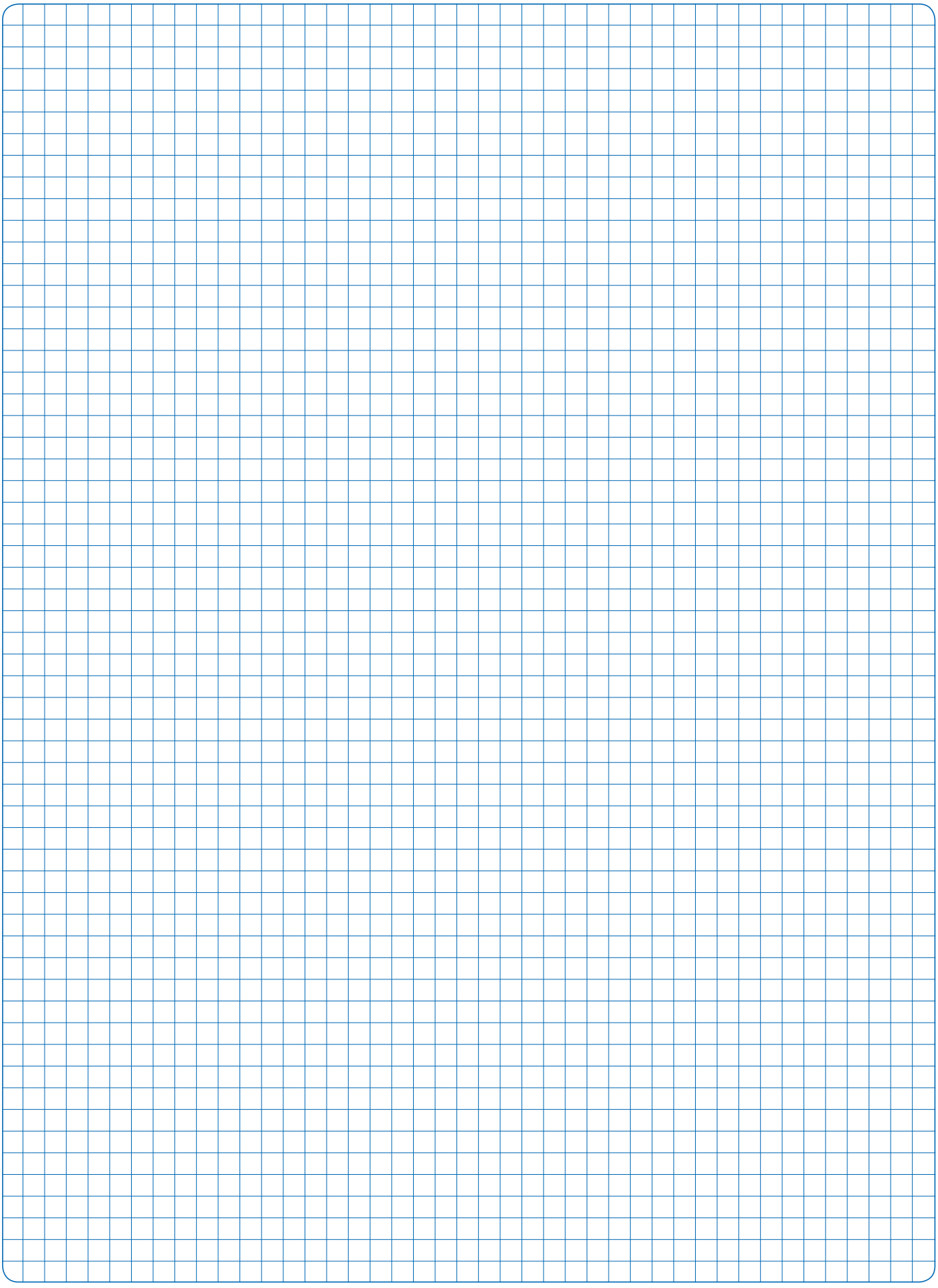



Hand, foot, and desk switches

Hand switches

EHA 1 332
EHA 3 334
EHE 1 336
HS 338
PHC 340
CAES 342

Foot switches

ST 344
PFP 346

Desk switches

ST 348
LD 350
PAM 352

Hand switch EHA 1

Benefits

- Robust ergonomic design
- Tactile buttons, clearly marked
- Easy mountable fastening hook



Suitable pillars, actuators and control units

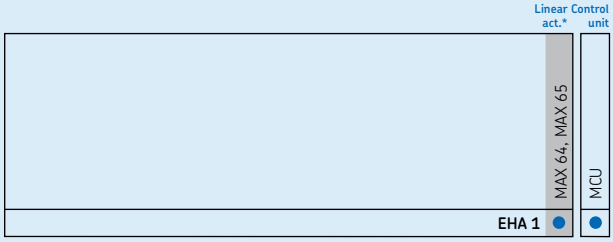

* With integrated control units

Dimensional drawing

D-Sub 9

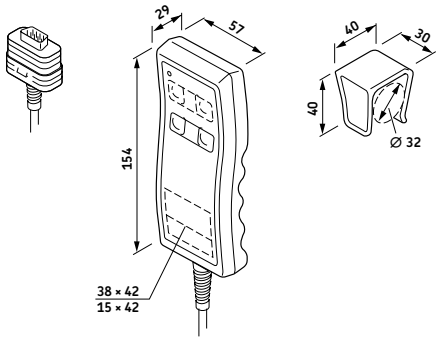

Technical data

	Unit	EHA 1
Max. operating channels	n°	2
Operating power	V DC/mA	12/50
Type of protection	IP	67
Color	–	Grey

Accessories

	Designation	Order N°
Hook with sticker	ZBG–145361–000	M/0125538

Ordering key

EHA1 □ – □ 1 □ □□ N – 000

Type

Number of channels:
1 channel 1
2 channels 2

Hook:
Yes mounted with hook 1
Hook supplied separately 2

Cable / connecting plug:
Coiled, 1,3 m/2,5 m / D-sub 9-pin plug B
Coiled 2,5 m/3,5 m / D-sub 9-pin plug F

Symbols:

None		00
1 channel:	Arrow up/down	10
	Head	11
2 channels:	Arrow up/down	20
	Head/foot	22
	Level/head	23

Hand switch EHA 3

Benefits

- Robust ergonomic design
- Tactile buttons, clearly marked
- Easy mountable fastening hook



Suitable pillars and control units

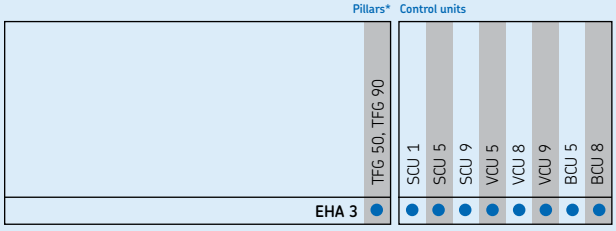

* With integrated control units

Dimensional drawing

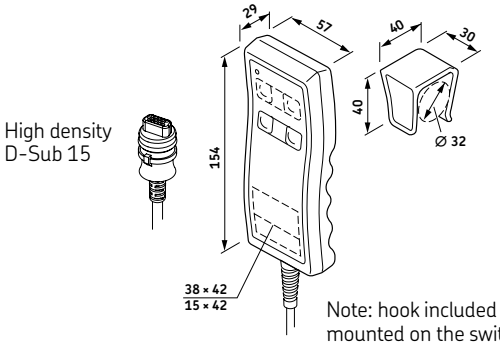

Note: hook included but not mounted on the switch.

Technical data

	Unit	EHA 3
Max. operating channels	n°	5
Operating power	V DC/mA	12/50
Type of protection	IP	67
Color	–	Grey

Accessories

	Designation	Order N°
Hook with sticker	ZBG–145361-000	M/0125538

Ordering key

EHA3 □ –23M □□ N–000

Type

Number of channels:

1 channel	1
2 channels	2
3 channels	3
4 channels	4
5 channels	5
1 channel with 3 memory positions (only for SCU)	A
2 channels with 3 memory positions (only for SCU)	B
3 channels with 3 memory positions (only for SCU)	C

Symbols:

None		00
1 channel: 2nd row from top	Arrow up/down	10
	Head	11
	Foot	12
	Level	13
	Anti-Trendelenburg	14
2 channels: 1st-2nd row from top	Arrow up/down	20
	Head/foot	21
	Head/level	22
	Level/head	23
	Level/Anti-Trendelenburg	29
3 channels: 1st-3rd row from top	Arrow up/down	30
	Head/foot/level	31
	Level/head/foot	32
	Level/Anti-Trendelenburg/Head	39
4 channels: 1st-4th row from top	Arrow up/down	40
	Level/Anti-Trendelenburg/Head/Foot	47
5 channels: 1st-5th row from top	Arrow up/down	50

Options shown in italics are only available on demand. Contact SKF for more information on minimum quantities and additional costs.

Hand switch EHE 1

Benefits

- Easy and precise
- Ergonomic design



Suitable pillars and control unit

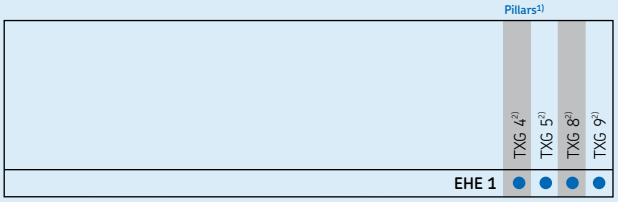

[1]With integrated control units
[2]Only with FCC plug

Dimensional drawing

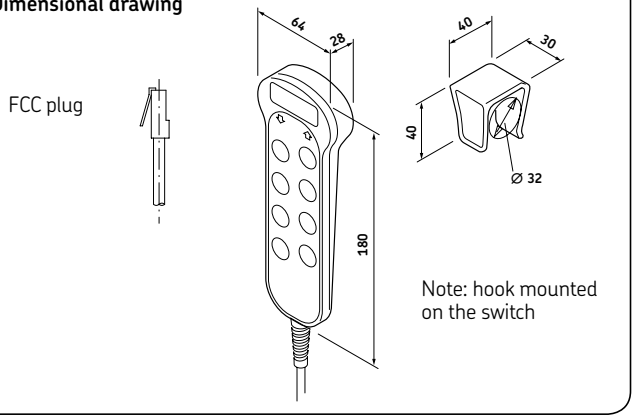

Note: hook mounted on the switch

Technical data

	Unit	EHE 1
Max. operating channels	n°	2
Operating power	V DC/mA	38/50
Type of protection	IP	x7
Color	–	Grey

Accessories

	Designation	Order N°
Hook	ZBG–145361–000	M/0125538

Ordering key

EHE1 □ –1B1 □□ B–000

Type

Number of channels:
1 channel 1
2 channels 2

Symbols:
1 channel: Arrow up/down 10
2 channels: Arrow up/down 20

Hand switch HS

Benefits

- Robust ergonomic design
- Tactile buttons, clearly marked



Suitable control unit

	Control unit
	CB 200S
HS 112	●
HS 124	●
HS 126	●
HS 138	●

Technical data

	Unit	HS
Max. operating channels	n°	3
Operating power	V DC/mA	24
Type of protection	IP	–
Color	–	Black

Dimensional drawing

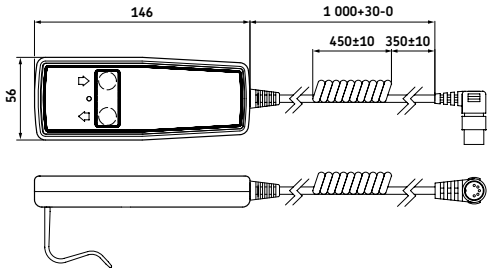

HS 112

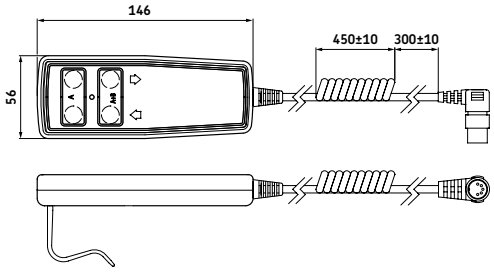

HS 124

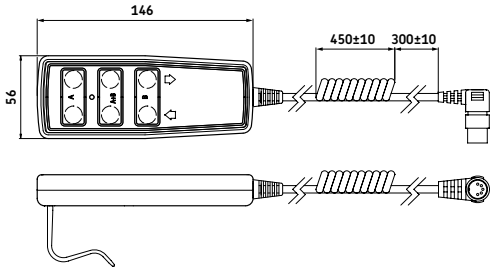

HS 126

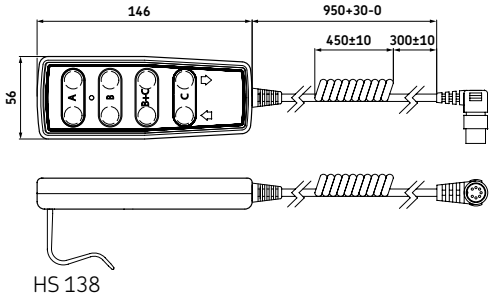

HS 138

Product ordering keys

HS 112
HS 124
HS 126
HS 138

Pneumatic hand switch PHC

Benefits

- Operation with air (no electricity)
- Ergonomic design



Suitable linear actuators and pillars

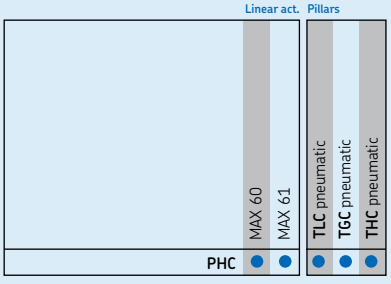

Dimensional drawing

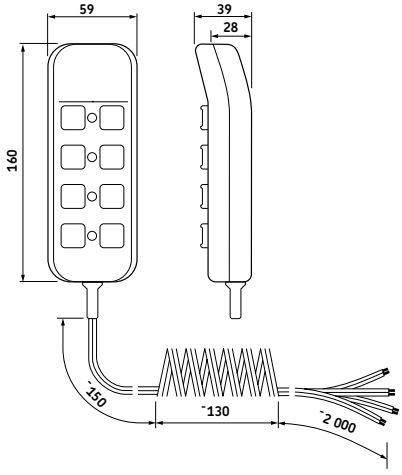

Technical data

	Unit	PHC
Max. operating channels	n°	4
Operating power	V DC/mA	N/A
Type of protection	IP	66
Color	–	Grey

Product ordering keys

PHC 1 – 130517 (1 channel with arrows up/down, without hook)
PHC 2 – 130625 (2 channels with arrows up/down, without hook)
PHC 3 – 130756 (3 channels with arrows up/down, without hook)
PHC 4 – 130955 (4 channels with arrows up/down, without hook)

* Other symbols / with hook on demand

Hand switch CAES

Benefits

- Robust ergonomic design
- Membrane keyboard
- Clearly marked keys



Suitable control units

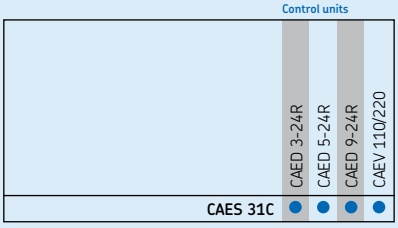

Dimensional drawing

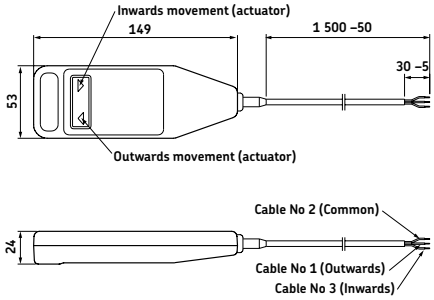

Connecting diagram

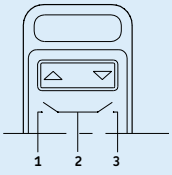

Technical data

	Unit	CAES 31C
Max. operating channels	n°	1
Operating power	V DC/mA	30/33
Type of protection	IP	54
Color	–	Black

Product ordering key

CAES 31C (No connector, 2 buttons)

Foot switch
ST

Benefits

- Easy and precise
- Ergonomic design
- Different plug options



Suitable pillars, actuators and control units

	Pillars[1]		Linear act.[1]	Control units								
	TFG 50/90	TXG 4/5/8/9[2]	MAX 64, MAX 65	SCU 1	SCU 5	SCU 9	VCU 5	VCU 8	VCU 9	BCU 5	BCU 8	MCU
STJ	●			●	●	●	●	●	●	●	●	
STF		●	●									●

1) With integrated control units
2) Only with FCC plug

Dimensional drawing

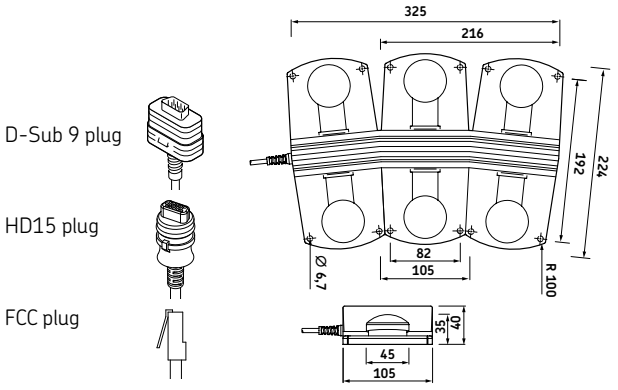

Technical data

	Unit	ST
Max. operating channels	n°	3
Operating power	V DC/mA	12/50
Type of protection	IP	×5
Color	–	Blue/anthracite

Accessories

	Designation	Order N°
Rubber feet (100 pcs.)	ZBE–135310	M/0102879
Sticker arrow up	ZFS–135309–0001	M/0125710
Sticker arrow down	ZFS–135309–0002	M/0125711
Sticker level up	ZFS–135309–0007	M/0125712
Sticker level down	ZFS–135309–0008	M/0125713
Sticker head up	ZFS–135309–0009	M/0125714
Sticker head down	ZFS–135309–0010	M/0125715
Sticker foot up	ZFS–135309–0011	M/0125716
Sticker foot down	ZFS–135309–0012	M/0125717

Ordering key

S T ☐ 0 ☐ – ☐☐ ☐ ☐☐☐ – ☐☐ 0 0

Type

Product group:
- Classic, D-Sub9 or FCC plug: F
- Standard, HD15 plug: J

Number of channels:
- One (1) channel: 1
- Two (2) channels: 2
- Three (3) channels: 3

Cable / connecting plug:
- Coiled cable 1,3–2,5 m / D-sub plug: LU
- Coiled cable 1,3–2,5 m / HD15 plug: LW
- Straight cable 2,5 m / D-sub plug: 0U
- Straight cable 2,5 m / FCC plug (only for STF01 and STF02): 0V
- Straight cable 2,5 m / HD15 plug: 0W

Color:
- Anthracite: 1
- Blue: 4

Option:
- None: 000
- Mounted with rubber feet: MAY

Symbols:
- Arrow up/down (on each pair of buttons), 1–3 channels: X1
- Arrow up/down, M/1, 2/3 (3 memory buttons) only for STJ03: 37

Pneumatic foot switch PFP

Benefits

- Robust ergonomic design
- Operation with air (no electricity)



Suitable linear actuators and pillars

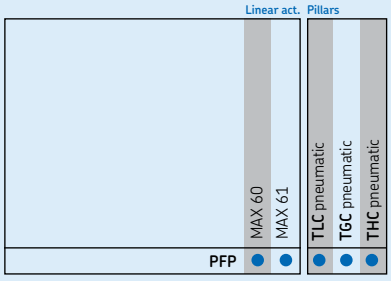

Dimensional drawing

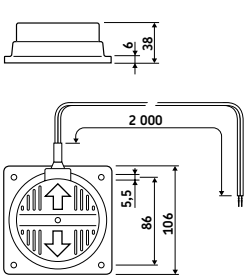

PFP 1K–130652

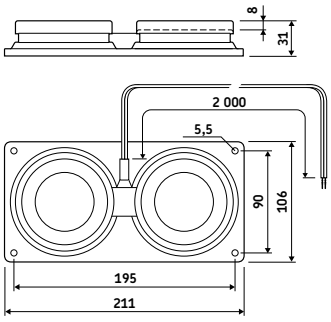

PFP 1–121545

Technical data

	Unit	PFP 1K	PFP 1
Max. operating channels	n°	1	1
Operating power	V DC/mA	N/A	N/A
Type of protection	IP	21	21
Color	–	Grey	Anthracite

Product ordering keys

PFP 1K – 130652
PFP 1 – 121545

Other versions on request.

Desk switch ST

Benefits

- Easy and precise
- Stylish design
- Memory position



Suitable pillars, actuators and control units

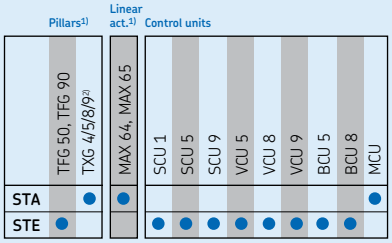

[1] With integrated control units
[2] Only with FCC plug

Dimensional drawing

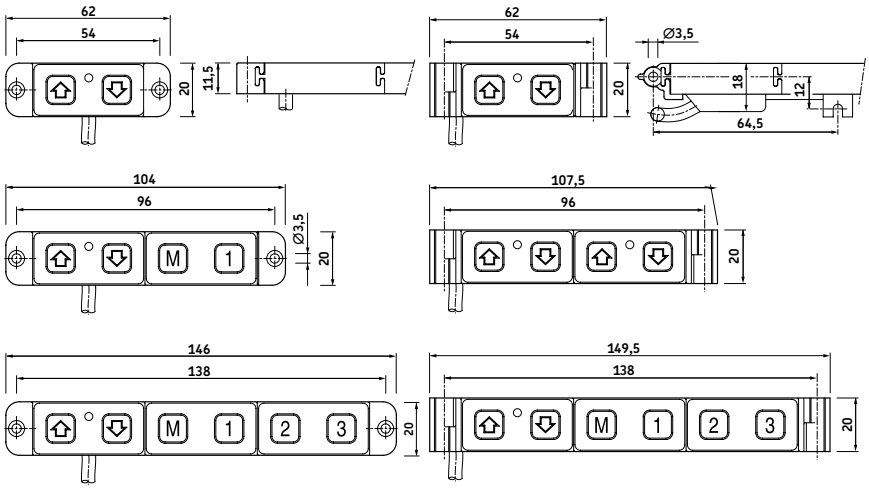

STA straight

STA 90°

Technical data

	Unit	ST
Max. operating channels	n°	3
Operating power	V DC/mA	12/50
Type of protection	IP	×0
Color	–	Black

Ordering key

S	T		0		–			6				–			0	0

Type

Product group:
Classic, D-Sub9 or FCC plug – A
Standard, HD15 plug – E

Number of channels:
One (1) channel – 1
Two (2) channels – 2
Three (3) channels – 3

Cable / connecting plug:
Straight cable 2,5 m / D-sub plug – 0U
Straight cable 1,5 m / FCC plug – WV
Straight cable 2,5 m / HD15 plug – 0W

Option:
No option – 000
Mounted on or underneath desktop, at a 90° angle – MAU

Symbols:
Up/down arrow on each pair of keys (1-3 channels) – X1
Up/down arrow, 3 memory functions M/1, M/2, M/3 (3 channels) – 37

Desk switch LD

Benefits

- Easy and precise
- Stylish design
- Different functions



Suitable pillars and control units

	Pillars[1]	Control units	
	TXG 4/5/8/9[2]	LD-014	LD-015
LD-034.000.004		●	●
LD-011.031.000		●	●
LD-011.001.006	●		

[1] With integrated control units
[2] Only with FCC plug

Dimensional drawing

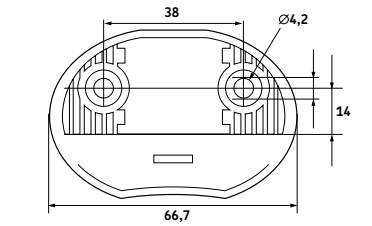

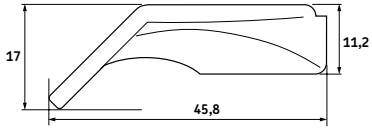

LD–034.000.004

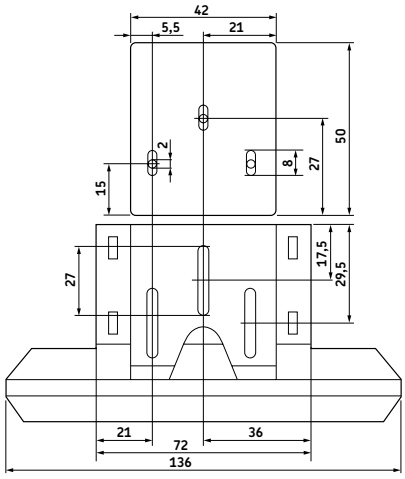

LD–011.001.006

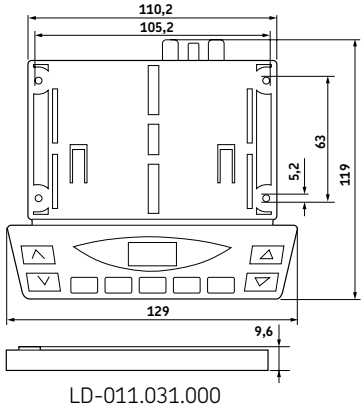

LD-011.031.000

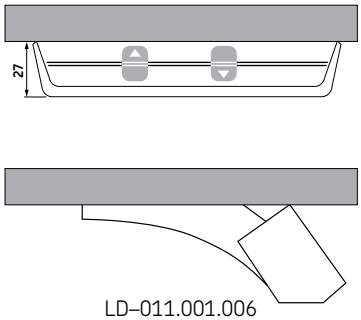

LD–011.001.006

Technical data

	Unit	LD–034.000.004	LD–011.031.000	LD–011.001.006
Max. operating channels	n°	1	1 or 2	1
Operating power	V DC/mA	5/50	5/50	5/50
Type of protection	IP	32	32	32
Color	–	Black	Black	Black

Product ordering keys

LD–034.000.004 (DIN7 plug)
LD–011.031.000 (DIN7 plug)
LD–011.001.006 (FCC plug, only for TXG)

Pneumatic desk switch PAM

Benefits

- Operation with air (no electricity)
- Stylish design



Suitable linear actuators and pillars

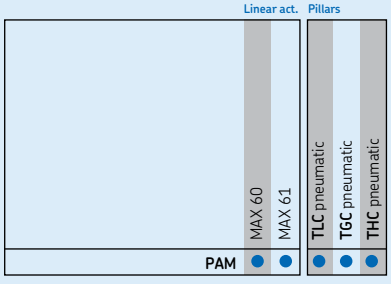

Dimensional drawing

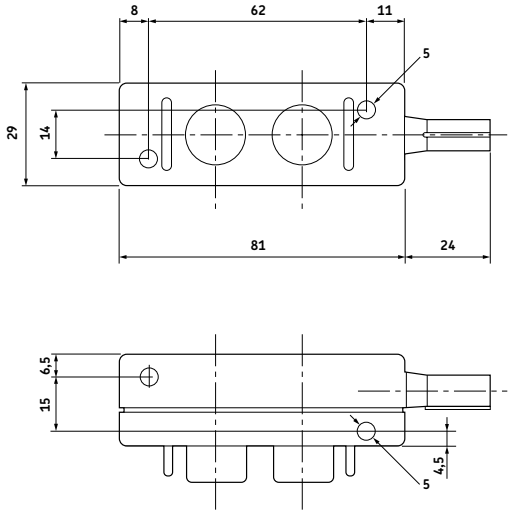

Technical data

	Unit	PAM –130256
Max. operating channels	n°	1
Operating power	V DC/ mA	N/A
Type of protection	IP	N/A
Tube	–	Straight, 1,50 m
Color	–	Anthracite

Product ordering key

PAM–130256

6

Customized projects

Rotary actuators. 356

Compact electromechanical cylinder. 358

Modular electromechanical cylinder 362

Rotary actuators

Benefits

- Outdoor application
- Elasticity negligible

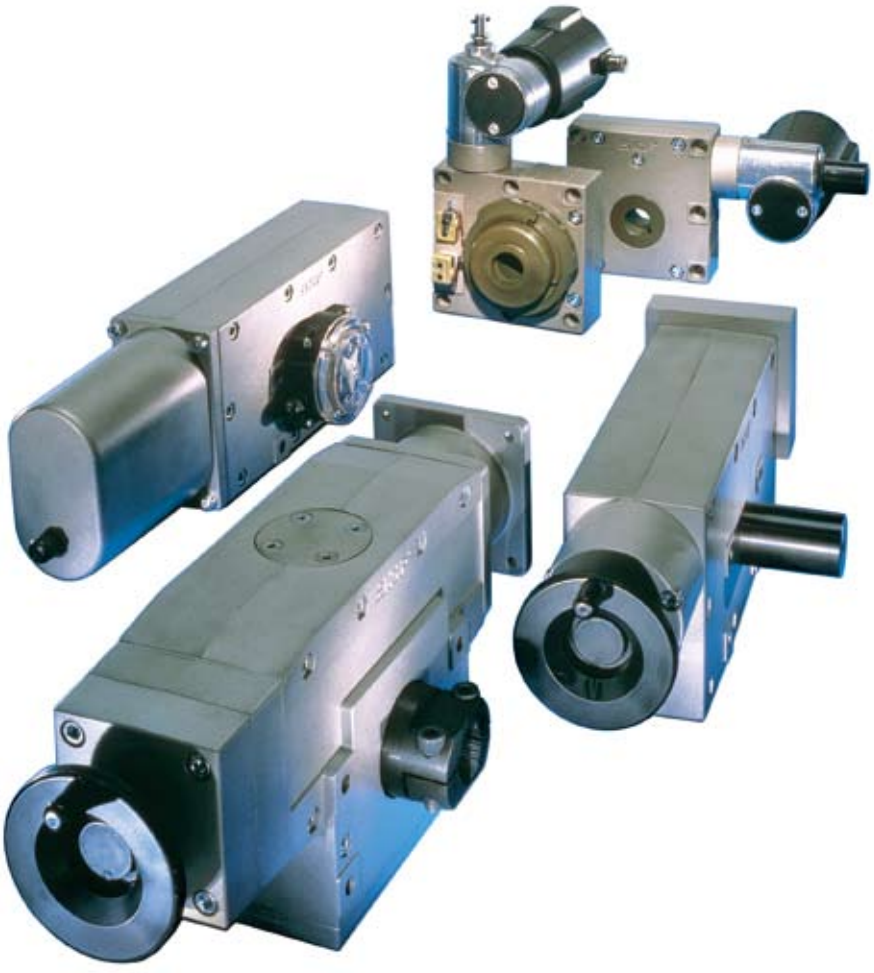

Dimensional drawing

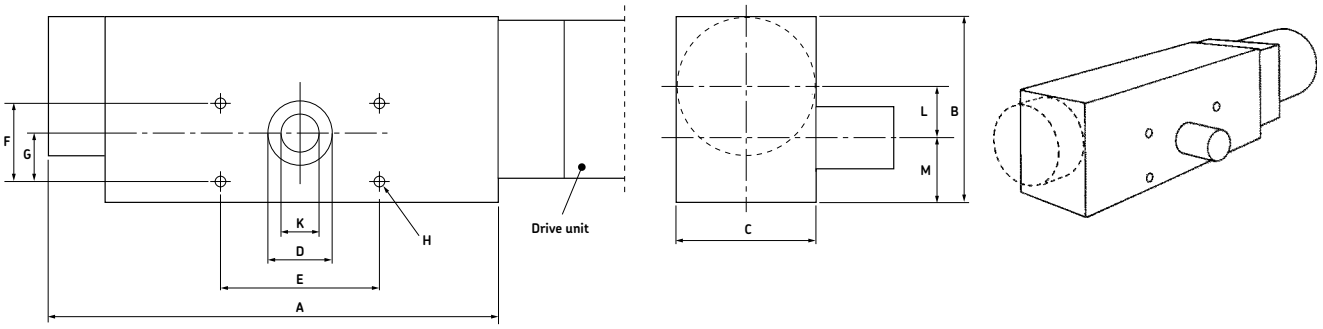

CRAB 12

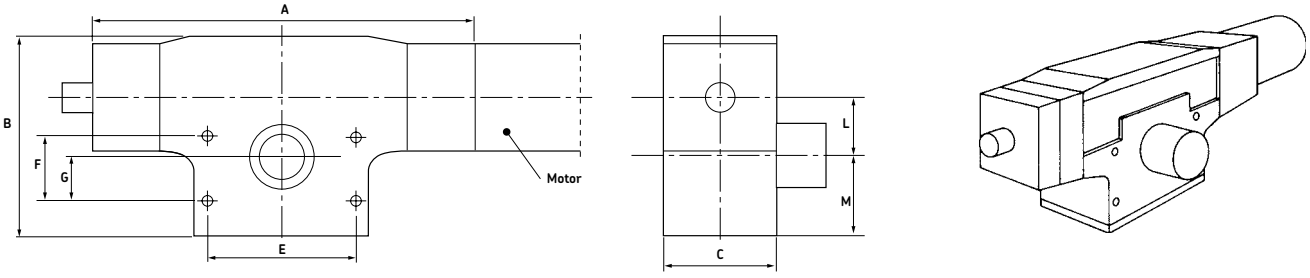

CRAB 20–30–40

Actuator	"A" dimensions in mm					Actuator	Dimensions in mm						
	≤110°	125°	180°	270°	360°		B	C	E	F	G	L	M
CRAB 12	N/A	310	N/A	N/A	N/A	**CRAB 12**	120	76	100	50	38	36	48
CRAB 20	306	N/A	419	557	720	**CRAB 20**	155	90	120	50	35	46	63
CRAB 30	455	N/A	626	846	1 097	**CRAB 30**	228	122	176	85	60	72	92
CRAB 40	565	N/A	768	1 050	1 371	**CRAB 40**	286	134	230	115	80	92	116

Technical data

Actuator	Angular working range	Gear ratio Ball screw	Angular speed	Efficiency factor Ball screw	Instant output torque Max.	axial load Max.	tilting torque Max.	Backlash Ball screw	Start torque	Temp. range	Weight
–	–	°	°/s	%	Nm	N	Nm	°	Nm	°C	kg
CRAB 12*	125	1:44	120	75	200	5 000	160	±0,05	≈0,3	–20 to +60	7
CRAB 20	360	1:56	90	75	400	10 000	1 120	0,0	≈0,5	–20 to +60	9
CRAB 30	360	1:88	65	75	1 000	15 000	3 465	0,0	≈1,0	–20 to +60	25
CRAB 40	360	1:113	45	75	1 700	20 000	6 240	0,0	≈2,0	–20 to +60	42

* Dimensions according to detailed drawings in publication 6358

Compact electromechanical cylinder

Benefits

- High power and reliable
- Compact and dynamic solution
- Low energy consumer



Compact design



Technical data

Type	Screw lead	Nominal force[1]	Peak force[2]	Linear speed	Standard stroke	Over-stroke[4]	Dynamic load	Nominal power	Controller size[5]
	mm	kN	kN	mm/s	mm	mm	kN	kN	–
CEMC1804–145–1–42J	3,75	4,7	10,3	350	145	1 (×2)	26,6	1,6	08
CEMC2404–•••–•–62L	4,00	8,7	23,8	300	125–135–170	1 (×2)	61,0	2,6	16
CEMC2406–125–•–62L	6,00	5,8	15,9	450	125	1 (×2)	61,0	2,6	16
CEMC2404–•••–•–63I	4,00	13,1	26,0	300	125–135–170	1 (×2)	61,0	3,3	16
CEMC2406–125–•–63I	6,00	8,7	17,3	450	125	1 (×2)	61,0	3,3	16

[1] Nominal force: can be used 100 % of time at low speed (10 % of maximum speed).
[2] Peak force: max force under short time (1 s max) at low speed with selected drive.
[4] Integrated at each end.

Ultra-compact design



Technical data

Type	Screw lead	Nominal force[1)]	Peak force[2)]	Linear speed	Standard stroke	Over-stroke[4)]	Dynamic load	Nominal power	Controller size[5)]
	mm	kN	kN	mm/s	mm	mm	kN	kN	–
CEMC2104–170–•–D63L	4	9,0	17,9	353	170	1 (x2)	48,1	2,3	16
CEMC2404–•••–2–D82P	4	14,1	28,2	320	90–170	1 (x2)	61,0	4,7	16
CEMC2406–•••–2–D82P	6	9,4	18,8	480	90–170	1 (x2)	61,0	4,7	16
CEMC3004–•••–2–D82P	4	14,1	28,2	266	90–170	1 (x2)	105,0	3,9	16
CEMC3006–•••–2–D82P	6	9,4	18,8	400	90–170	1 (x2)	105,0	3,9	16
CEMC3004–•••–2–D84H	4	27,4	53,1	266	90–170	1 (x2)	105,0	6,2	32
CEMC3006–•••–2–D84H	6	18,3	35,4	400	90–170	1 (x2)	105,0	6,2	32
CEMC3004–•••–2–D86F	4	39,5	83,4	266	90–170	1 (x2)	105,0	6,6	50
CEMC3006–•••–2–D86F	6	26,3	55,6	400	90–170	1 (x2)	105,0	6,6	50

[1)] Nominal force: can be used 100 % of time at low speed (10 % of maximum speed).
[2)] Peak force: max force under short time (1 s max) at low speed with selected drive.
[4)] Integrated at each end.

Modular electromechanical cylinder

Benefits

- The power of hydraulics
- The velocity of pneumatics



Dimensional drawing

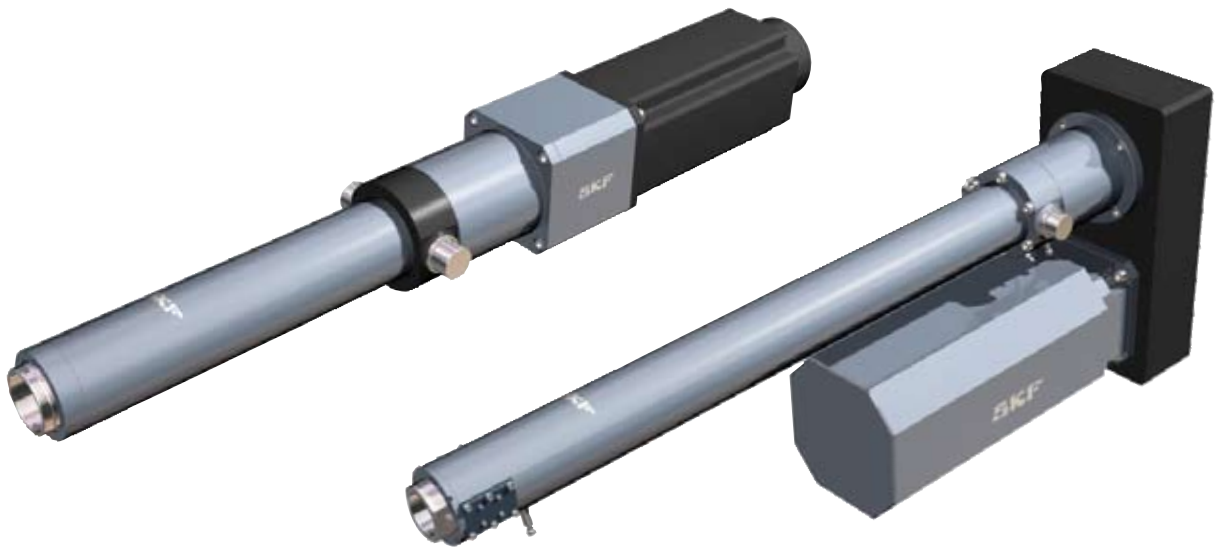

Technical data

Designation	Screw lead	Nominal force Up to	Peak force Up to	Linear speed Up to	Standard stroke	Dynamic load
	mm	kN	kN	mm/s	mm	kN
SRSA 2505	5	40,7	81,7[1)]	333	0 to 400	63,3
SRSA 2510	10	37,5	90,5[1)]	450	0 to 400	72,6
SRSA 3005	5	52,9	102,8[1)]	325	0 to 500	92
SRSA 3010	10	49,9	97,1[1)]	650	0 to 500	97,6
SRSA 3905	5	63,3	123,1[1)]	279,2[2)]	0 to 800	129,2
SRSA 3910	10	61	130,1[1)]	350	0 to 800	138,5
SRSA 3915	15	61,5	141,7[1)]	650	0 to 800	138,5
SRSA 4805	5	106,5	248[1)]	220,8[2)]	0 to 1 000	198,1
SRSA 4810	10	95,3	187,2[1)]	350	0 to 1 000	207,9
SRSA 4815	15	130,4	202,4[1)]	412,5	0 to 1 000	207,9
SRSA 4820	20	86,3	169,6[1)]	550	0 to 1 000	207,9
SRSA 6010	10	161,9	318,1[1)]	275	0 to 1 300	303,9
SRSA 6015	15	162,3	318,7[1)]	462,5	0 to 1 300	303,9
SRSA 6020	20	142,7	251,9[1)]	666,7	0 to 1 300	303,9
SRSA 7510	10	255,5	451[1)]	250[2)]	0 to 1 500	471,6
SRSA 7515	15	240,2	271,3	357[2)]	0 to 1 500	471,6
SRSA 7520	20	199,4	223,9	466,7	0 to 1 500	471,6
SVSA 3201	1	40,6	78,3[1)]	10,4[2)]	0 to 1000	64,3
SVSA 4001	1	62,3	121,3[1)]	8,3[2)]	0 to 1000	79,1
SVSA 5001	1	110,2	214,4[1)]	6,7[2)]	0 to 1000	138,5
SLSA 2525	25	8,2	18,8	1500[2)]	0 to 500	22,6
SLSA 4040	40	12,4	18,7	1500[2)]	0 to 1 200	53,3

[1)] Peak force to be used only in static phases. For dynamic ones, this value must be limited inside the motion controller at 80 % of the dynamic load by the user. Please contact SKF.
[2)] Maximum speed. This value must be limited inside the motion controller by the user. Please contact SKF.

Drive by wire

Electronic Parking Brake EPB 366

Electronic cable puller actuator for off-highway vehicles

Benefits

- Easy to install
- Compact
- Eco-friendly solution
- Enhanced comfort and safety for user

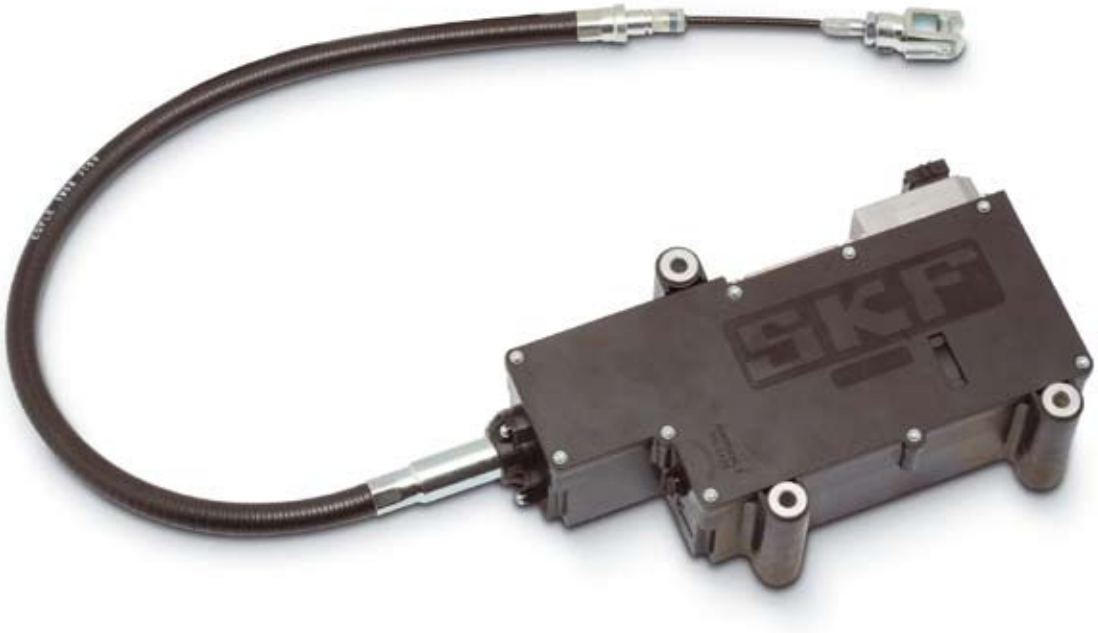

Dimensional drawing

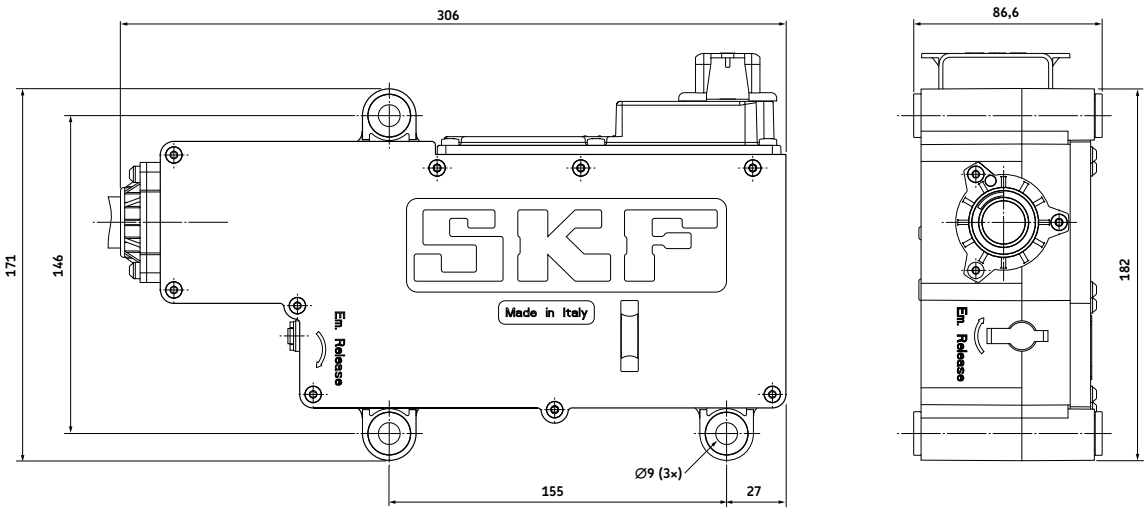

Technical data

	Unit	ADW–0000
Max force	N	4 000
Stroke	mm	65
Max speed (without load)	mm/s	18
Endurance	Apply/release cycles	170 000
Supply voltage at full performance (range)	V	11,5 to 16
Supply voltage at longer apply/release time (range)	V	10 to 11,5
Supply voltage at electronics full active (range)	V	9 to 16
Max current consumption (during actuations)	A	30
Max current consumption (only electronics)	A	0,2
Ambient temperature	°C	–40 to + 85
Humidity	%	20 to 80
Protection class	IP	67
Weight (without bowden cable)	kg	3

For more information about this product, please contact SKF.

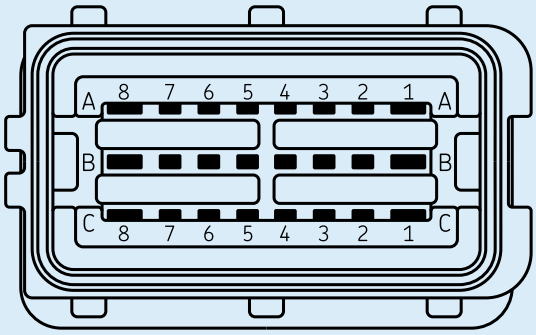

Connections*

Pin #	Signal name	Function	Direction	Type of signal
A1	V_BATT_S12_M	Power supply main	IN	DC
A8	GND_POWER_M	Ground power supply main	GND	DC
A2	OUT1H_DO	1° High side output for relay	OUT	Digital
A3	OUT2H_DO	2° High side output for relay	OUT	Digital
A6	OUT3_DO	High side output for LED	OUT	Digital
A7	OUT4_DO	Low side output for LED	OUT	Digital/freq
C1	KEY_ON	Ignition Key	IN	Analog/Digital
C2	CAN_H_0	CAN_0 vehicle	BI	Standard protocol
C3	CAN_L_0	CAN_0 vehicle	BI	Standard protocol
C4	CAN_H_1	CAN_1 for development	BI	Standard protocol
C5	CAN_L_1	CAN_1 for development	BI	Standard protocol
B1	ASNS_SO5	External + 5V supply output for potmeter	OUT	DC
C6	ASNS_AI_1	Analog input 1	IN	Analog
C7	ASNS_AI_2	Analog input 2	IN	Analog
B8	V_BATT_S12_S	Power supply for backup battery	IN	DC
C8	GND_POWER_S	Ground power supply for backup	GND	DC
A5	ASNS_GND_1	Analog input 1 ground	GND	DC
A4	ASNS_GND_2	Analog input 2 ground	GND	DC
B2	IN_H_SPARE 1	Digital spare input 1	IN	Digital/freq
B3	IN_H_SPARE 2	Digital spare input 2	IN	Digital/freq
B4	IN_L_SPARE 3	Digital spare input 3	IN	Digital/freq
B5	IN_L_SPARE 4	Digital spare input 4	IN	Digital/freq
B6	OUT1L_SPARE 1	Low side output 1	OUT	Digital
B7	OUT1L_SPARE 2	Low side output 2	OUT	Digital

* Connector type: 24 way sealed, SICMA type by FCI (p/n HCCBPE24BKA00F)

Spare parts

CAR 22. 372
CAR 32. 372
CAR 40. 373
CAP 32. 373
CARN 32 374
CCBR 32. 374
CAT 33 375
CAT 33H. 375
CAT 32B. 376
CAP 43. 376
Attachments. 377
Limit switches. 378
Feedback for CAT series 380
Feedback for CARE 33 series 381

CAR 22 – Type codes for accessories and spare parts

Item code	Type code	Order N°
12 VDC motor (flat motor)	D12B	M/0405516
24 VDC motor (flat motor)	D24B	M/0405517
Limit switch for stroke =50 mm	CAXB 22 × 50	M/0405137
Limit switch for stroke =100 mm	CAXB 22 × 100	M/0405138
Limit switch for stroke =150 mm	CAXB 22 × 150	M/0405139
Limit switch for stroke =200 mm	CAXB 22 × 200	M/0405140
Limit switch for stroke =300 mm	CAXB 22 × 300	M/0405141
Proximity switch for CAXB	CAXB Proximity switch	M/0431589
Front mounting attachments type Rod–end	575–22	M/0430575–22
Front mounting attachments type Clevis	576–22	M/0430576–22
Rear mounting attachments type Single ear bracket	580–22	M/0430580–22
Rear mounting attachments type Ball–joint bracket	581–22	M/0430581–22
Control unit (suitable for D24B motor)	CAED 5–24R	M/0420209
Handset matched for CAED	CAES 31C	M/0420213

CAR 32 – Type codes for accessories and spare parts

Item code	Type code	Order N°
12 V DC motor (flat motor)	D12C	M/0405518
24 V DC motor (flat motor)	D24C	M/0405519
24 V DC motor (flat motor with brake)	D24CB	M/0405523
24 V DC motor (flat motor with extended shaft)	D24CS	M/0405522
24 V DC motor (flat motor with low speed)	D24CW	M/0405521
120 V AC motor (cylindrical motor)	E110C	M/0405533
120 V AC motor (cylindrical motor with brake)	E110CB	M/0405534
230 V AC motor (cylindrical motor)	E220C	M/0405531
230 V AC motor (cylindrical motor with brake)	E220CB	M/0405532
Capacitor value 25 µF (120 V AC)	Capacitor 25 µF	M/0430670–06
Capacitor value 6 µF (230 V AC)	Capacitor 6 µF	M/0430670–03
Limit switch for stroke =50 mm	CAXB 32 × 50	M/0405142
Limit switch for stroke =100 mm	CAXB 32 × 100	M/0405143
Limit switch for stroke =200 mm	CAXB 32 × 200	M/0405146
Limit switch for stroke =300 mm	CAXB 32 × 300	M/0405148
Limit switch for stroke =500 mm	CAXB 32 × 500	M/0405150
Limit switch for stroke =700 mm	CAXB 32 × 700	M/0405153
Proximity switch for CAXB	CAXB Proximity switch	M/0431589
Front mounting attachments type Rod-end	575–32	M/0430575–32
Front mounting attachments type Clevis	576–32	M/0430576–32
Rear mounting attachments type Single ear bracket	580–32	M/0430580–32
Rear mounting attachments type Universal joint	582–32	M/0431780–32
Control unit (suitable for E110, E220 motors)	CAEV 110/220	M/0420097
Control unit (suitable for D24CW,C24CW motor)	CAED 5–24R	M/0420209
Control unit (suitable for D24C/CB/CS motors)	CAED 9–24R	M/0420210
Handset configured for CAED and CAEV units	CAES 31C	M/0420213

CAR 40 – Type codes for accessories and spare parts

Item code	Type code	Order N°
Limit switch for stroke =100 mm	CAXB 40 × 100	M/0405163
Limit switch for stroke =300 mm	CAXB 40 × 300	M/0405165
Limit switch for stroke =500 mm	CAXB 40 × 500	M/0405173
Limit switch for stroke =700 mm	CAXB 40 × 700	M/0405174
Proximity switch for CAXB	CAXB Proximity switch	M/0431589
Front mounting attachments type Rod–end	575–40	M/0430575–40
Front mounting attachments type Clevis	576–40	M/0430576–40
Rear mounting attachments type Single ear bracket	580–40	M/0430580–40
Rear mounting attachments type Ball–joint bracket	581–40	M/0430581–40
24 V DC motor (flat motor)	D24D	M/0405524
24 V DC motor (flat motor with extended shaft)	D24DS	M/0405526
24 V DC motor (flat motor with brake)	D24DB	M/0405525
120 V AC motor (cylindrical motor)	E110D	M/0405529
120 V AC motor (cylindrical motor with brake)	E110DB	M/0405530
230 V AC motor (cylindrical motor)	E220D	M/0405527
230 V AC motor (cylindrical motor with brake)	E220DB	M/0405528
Capacitor value 12 µF (230 VAC–motor)	Capacitor 12 µF	M/0430670–04

CAP 32 – Type codes for accessories and spare parts

Item code	Type code	Order N°
12 V DC motor (flat motor)	D12C	M/0405518
24 V DC motor (flat motor)	D24C	M/0405519
24 V DC motor (flat motor with brake)	D24CB	M/0405523
24 V DC motor (flat motor with extended shaft)	D24CS	M/0405522
24 V DC motor (flat motor with low speed)	D24CW	M/0405521
120 V AC motor (cylindrical motor)	E110C	M/0405533
120 V AC motor (cylindrical motor with brake)	E110CB	M/0405534
230 V AC motor (cylindrical motor)	E220C	M/0405531
230 V AC motor (cylindrical motor with brake)	E220CB	M/0405532
Capacitor value 25 µF (120 V AC)	Capacitor 25 µF	M/0430670-06
Capacitor value 6 µF (230 V AC)	Capacitor 6 µF	M/0430670-03
Limit switch for stroke =50 mm	CAXB 32 × 50	M/0405142
Limit switch for stroke =100 mm	CAXB 32 × 100	M/0405143
Limit switch for stroke =200 mm	CAXB 32 × 200	M/0405146
Limit switch for stroke =300 mm	CAXB 32 × 300	M/0405148
Limit switch for stroke =500 mm	CAXB 32 × 500	M/0405150
Limit switch for stroke =700 mm	CAXB 32 × 700	M/0405153
Proximity switch for CAXB	CAXB Proximity switch	M/0431589
Front mounting attachments type Rod-end	575–32	M/0430575–32
Front mounting attachments type Clevis	576–32	M/0430576–32
Rear mounting attachments type Single ear bracket	580–32	M/0430580–32
Rear mounting attachments type Universal joint	582–32	M/0431780–32

CARN 32 – Type codes for accessories and spare parts

Item code	Type code	Order N°
Limit switch for stroke =50 mm	CAXB 32 × 50	M/0405142
Limit switch for stroke =100 mm	CAXB 32 × 100	M/0405143
Limit switch for stroke =200 mm	CAXB 32 × 200	M/0405146
Limit switch for stroke =300 mm	CAXB 32 × 300	M/0405148
Limit switch for stroke =500 mm	CAXB 32 × 500	M/0405150
Limit switch for stroke =700 mm	CAXB 32 × 700	M/0405153
Proximity switch for CAXB	CAXB Proximity switch	M/0431589
Front mounting attachments type Rod-end	575–32	M/0430575–32
Front mounting attachments type Clevis	576–32	M/0430576–32
Rear mounting attachments type Single ear bracket	580–32	M/0430580–32
Rear mounting attachments type Universal joint	582–32	M/0431780–32

CCBR 32 – Type codes for accessories and spare parts

Item code	Type code	Order N°
Front mounting attachments type Rod-end	575–32	M/0430575–32
Front mounting attachments type Clevis	576–32	M/0430576–32

CAT 33 – Type codes for accessories and spare parts

Item code	Type code	Order N°
12 V DC motor (cylindrical motor)	C12C	M/0405535
12 V DC motor (flat motor)	D12C	M/0405518
24 V DC motor (cylindrical motor)	C24C	M/0405536
24 V DC motor (cylindrical with low speed)	C24CW	M/0405537
24 V DC motor (flat motor)	D24C	M/0405519
24 V DC motor (flat motor with brake)	D24CB	M/0405523
24 V DC motor (flat motor with extended shaft)	D24CS	M/0405522
24 V DC motor (flat motor with low speed)	D24CW	M/0405521
120 V AC motor (cylindrical motor)	E110C	M/0405533
120 V AC motor (cylindrical motor with brake)	E110CB	M/0405534
230 V AC motor (cylindrical motor)	E220C	M/0405531
230 V AC motor (cylindrical motor with brake)	E220CB	M/0405532
400 V AC motor (cylindrical motor)	E380C	M/0411607
Capacitor value 25 µF (120 V AC)	Capacitor 25 µF	M/0430670–06
Capacitor value 6 µF (230 V AC)	Capacitor 6 µF	M/0430670–03
Limit switch for any stroke	CAXC33	M/0436029–0750
Front mounting attachments type Rod-end	575–32	M/0430575–32
Front mounting attachments type Clevis	576–32	M/0430576–32
Rear mounting attachments type Single ear bracket	580–32	M/0430580–32
Rear mounting attachments type Universal joint	582–32	M/0431780–32
Control unit (suitable for E110, E220 motors)	CAEV 110/220	M/0420097
Control unit (suitable for D24CW,C24CW motor)	CAED 5–24R	M/0420209
Control unit (suitable for D24C/CB/CS motors)	CAED 9–24R	M/0420210
Handset configured for CAED and CAEV units	CAES 31C	M/0420213

CAT 33H – Type codes for accessories and spare parts

Item code	Type code	Order N°
12 V DC motor (cylindrical motor)	C12C	M/0405535
12 V DC motor (flat motor)	D12C	M/0405518
24 V DC motor (cylindrical motor)	C24C	M/0405536
24 V DC motor (cylindrical with low speed)	C24CW	M/0405537
24 V DC motor (flat motor)	D24C	M/0405519
24 V DC motor (flat motor with brake)	D24CB	M/0405523
24 V DC motor (flat motor with extended shaft)	D24CS	M/0405522
24 V DC motor (flat motor with low speed)	D24CW	M/0405521
120 V AC motor (cylindrical motor)	E110C	M/0405533
120 V AC motor (cylindrical motor with brake)	E110CB	M/0405534
230 V AC motor (cylindrical motor)	E220C	M/0405531
230 V AC motor (cylindrical motor with brake)	E220CB	M/0405532
400 V AC motor (cylindrical motor)	E380C	M/0411607
Capacitor value 25 µF (120 V AC)	Capacitor 25 µF	M/0430670–06
Capacitor value 6 µF (230 V AC)	Capacitor 6 µF	M/0430670–03
Front mounting attachments type Rod-end	575–32	M/0430575–32
Front mounting attachments type Clevis	576–32	M/0430576–32
Rear mounting attachments type Single ear bracket	580–32	M/0430580–32
Rear mounting attachments type Universal joint	582–32	M/0431780–32
Control unit (suitable for E110, E220 motors)	CAEV 110/220	M/0420097
Control unit (suitable for D24CW,C24CW motor)	CAED 5–24R	M/0420209
Control unit (suitable for D24C/CB/CS motors)	CAED 9–24R	M/0420210
Handset configured for CAED and CAEV units	CAES 31C	M/0420213

CAT 32B – Type codes for accessories and spare parts

Item code	Type code	Order N°
12 V DC motor (cylindrical motor)	C12C	M/0405535
12 V DC motor (flat motor)	D12C	M/0405518
24 V DC motor (cylindrical motor)	C24C	M/0405536
24 V DC motor (cylindrical with low speed)	C24CW	M/0405537
24 V DC motor (flat motor)	D24C	M/0405519
24 V DC motor (flat motor with brake)	D24CB	M/0405523
24 V DC motor (flat motor with extended shaft	D24CS	M/0405522
24 V DC motor (flat motor with low speed)	D24CW	M/0405521
120 V AC motor (cylindrical motor)	E110C	M/0405533
120 V AC motor (cylindrical motor with brake)	E110CB	M/0405534
230 V AC motor (cylindrical motor)	E220C	M/0405531
230 V AC motor (cylindrical motor with brake)	E220CB	M/0405532
400 V AC motor (cylindrical motor)	E380C	M/0411607
Capacitor value 25 µF (120 V AC)	Capacitor 25 µF	M/0430670–06
Capacitor value 6 µF (230 V AC)	Capacitor 6 µF	M/0430670–03
Limit switch for stroke =50 mm	CAXB 32B × 50	M/0405544
Limit switch for stroke =100 mm	CAXB 32B × 100	M/0405345
Limit switch for stroke =200 mm	CAXB 32B × 200	M/0405422
Limit switch for stroke =300 mm	CAXB 32B × 300	M/0405282
Limit switch for stroke =400 mm	CAXB 32B × 400	M/0405514
Limit switch for stroke =500 mm	CAXB 32B × 500	M/0402098
Limit switch for stroke =700 mm	CAXB 32B × 700	M/0402099
Proximity switch for CAXB	CAXB Proximity switch	M/0431589
Front mounting attachments type Rod-end	575–32	M/0430575–32
Front mounting attachments type Clevis	576–32	M/0430576–32
Rear mounting attachments type Single ear bracket	580–32	M/0430580–32
Rear mounting attachments type Universal joint	582–32	M/0431780–32
Control unit (suitable for E110, E220 motors)	CAEV 110/220	M/0420097
Control unit (suitable for D24CW, C24CW motor)	CAED 5–24R	M/0420209
Control unit (suitable for D24C/CB/CS, C24C motors)	CAED 9–24R	M/0420210
Handset configured for CAED and CAEV units	CAES 31C	M/0420213

CAP 43 – Type codes for accessories and spare parts

Item code	Type code	Order N°
24 V DC motor (cylindrical motor)	C24C	M/0405536
24 V DC motor (cylindrical with low speed)	C24CW	M/0405537
24 V DC motor (flat motor)	D24C	M/0405519
24 V DC motor (flat motor with low speed)	D24CW	M/0405521
Front mounting attachments type Rod-end	575–32	M/0430575–32
Front mounting attachments type Clevis	576–32	M/0430576–32
Rear mounting attachments type Single ear bracket	580–32	M/0430580–32
Rear mounting attachments type Universal joint	582–32	M/0431780–32
Control unit (suitable for D24CW, C24CW motors)	CAED–ANR 5–24R PO	M/0420215
Control unit (suitable for D24C, C24C motors)	CAED–ANR 9–24R PO	M/0420216

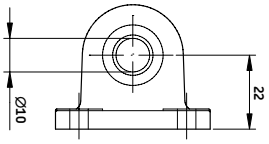

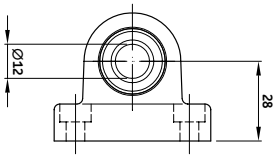

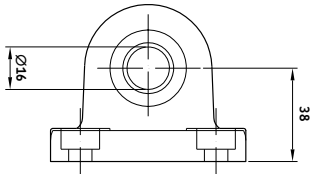

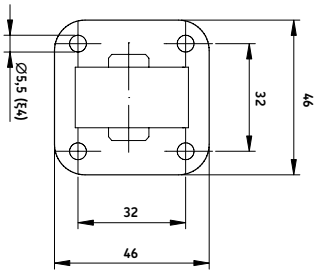

580–22

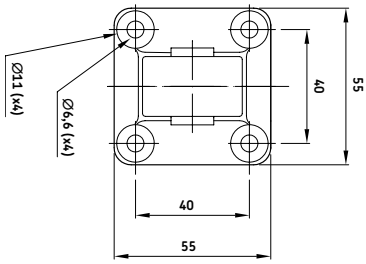

580–32

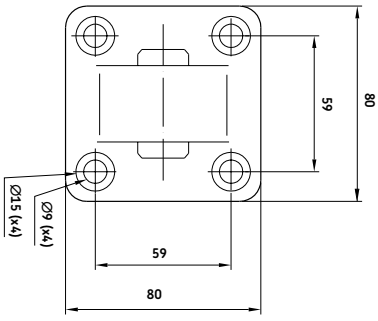

580–40

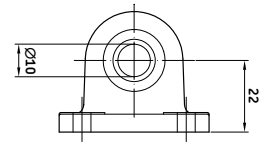

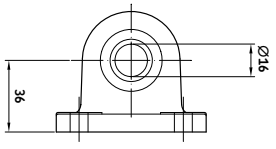

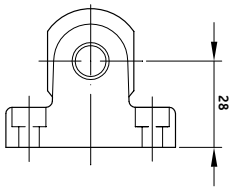

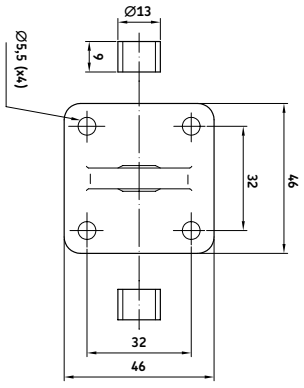

581–22

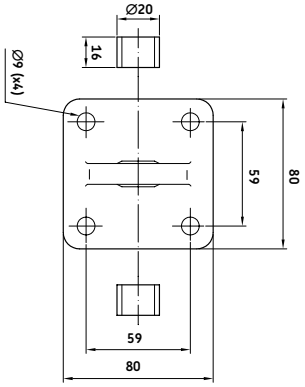

581–40

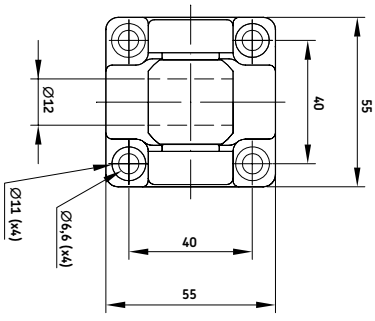

582–32

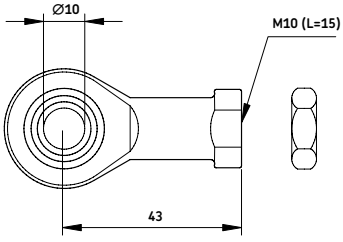

575–22

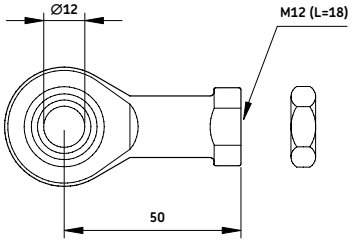

575–32

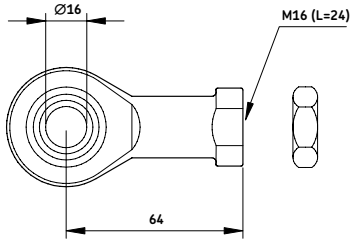

575–40

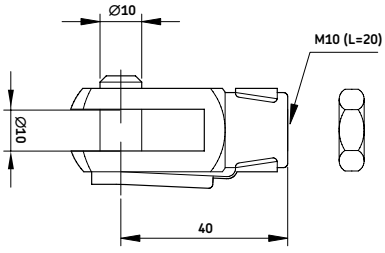

576–22

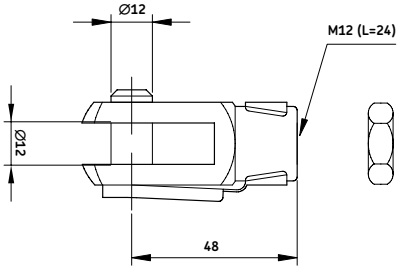

576–32

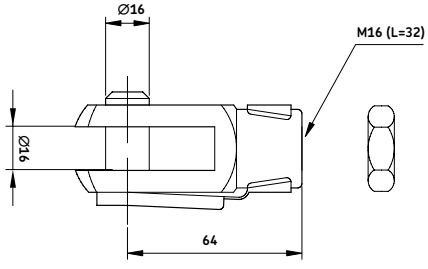

576–40

CAXC 33 limit switch

Limit switches, combined with SKF control units, make it possible to set the stroke to any desired length.

- CAXC 33 – designed for the following actuators:
  CAT 33
  CALA 36A
  CARE 33A
  CARE 33M
- Two CAXC needed for inner and outer limit
- Use of limit switches reduce the effective stroke by 20 mm (retracted position is affected)

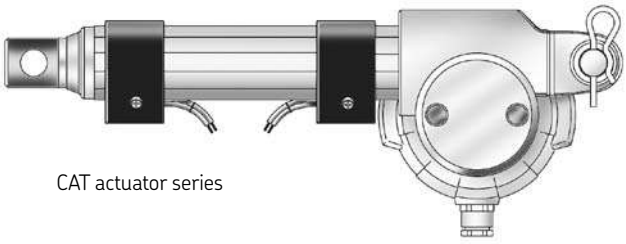

CAT actuator series

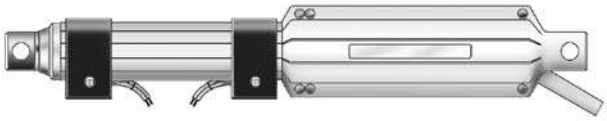

CALA actuator series

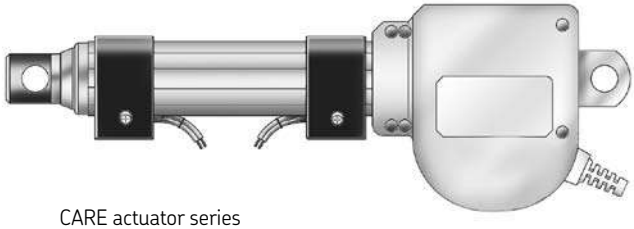

CARE actuator series

Connecting diagram

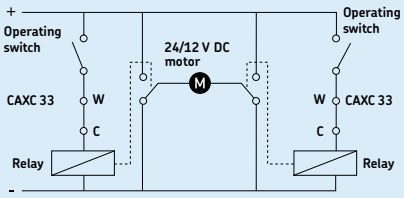

Technical data

Permissible power:	3 W
Max. DC voltage:	200 V
Max. DC current:	200 mA

Ordering code

CAXC 33
NB! One CAXC is needed for each limit position.
NB! Make sure you connect limit switches to a DC-supply.

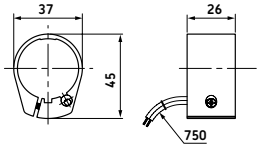

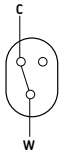

W= Common
C = Normally closed
O = Normally opened

CAXB limit switch

Limit switches, combined with SKF control units, make it possible to set the stroke to any desired length.

- CAXB - designed for the following actuators:
  CAR 22
  CAR 32
  CAR 40
  CAT 32B
  CARN 32

- To avoid running into mechanical end stop, the limit switches should be located approximately 10 mm from its respective end stop

- Front attachment G3 must be selected for this option

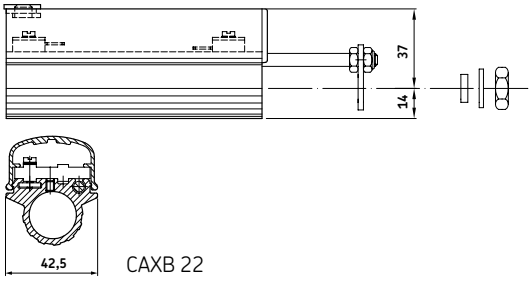

CAXB 22

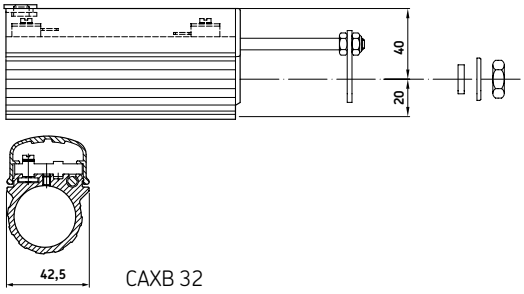

CAXB 32

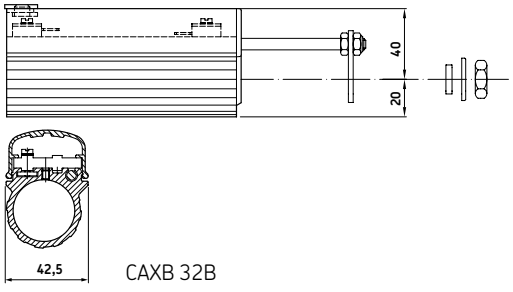

CAXB 32B

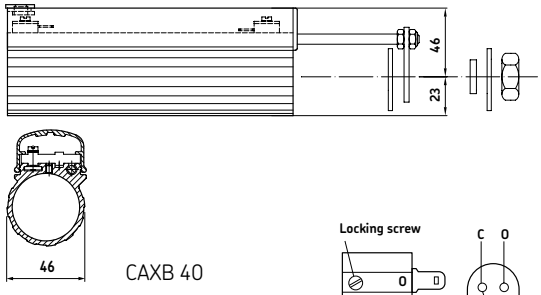

CAXB 40

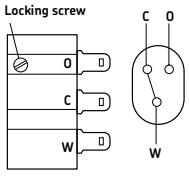

W= Common
C = Normally closed
O = Normally opened

Connecting diagram

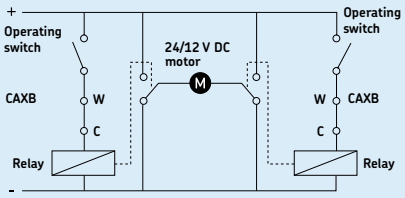

Technical data

Permissible power:	3 W
Max. DC voltage:	200 V
Max. DC current:	200 mA

Ordering key

C A X B

Type

CAXB 22 (CAR 22)	22
CAXB 32 (CAR 32, CARN)	32
CAXB 32B (CAT 32B)	32B
CAXB 40 (CAR 40)	40

Actuator stroke

50	(for CAR 22, 32, CARN and CAT 32B)	50
100	(for CAR 22, 32, 40 and CARN)	100
150	(for CAR 22)	150
200	(for CAR 22, 32, CARN and CAT 32B)	200
300	(for CAR 22, 32, 40, CARN and CAT 32B)	300
400	(for CAT 32B)	400
500	(for CAR 32, 40, CARN and CAT 32B)	500
700	(for CAR 32, 40, CARN and CAT 32B)	700

Encoder E2

- Can be fitted to all standard motors
- Hall effect, two channels with 90° displacement
- Located on gear housing, see drawing
- 2 pulses/channel and motor revolution
- Supply voltage: 5–24 V DC
- Final resolution according to gear ratio and actuator basic type (see table)

Feedback

	Gear	Pulses at 1mm stroke	Resolution (mm) per pulse
CAT 33	1	16,67	0,06
	2	8,33	0,12
	4	4,17	0,24
CAT 33H	1	4,00	0,25
	2	2,00	0,50
	4	1,00	1,00
CAT 32B	1	12,50	0,08
	2	6.25	0,16
	4	3,13	0,32

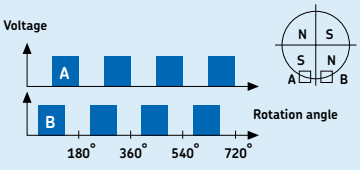

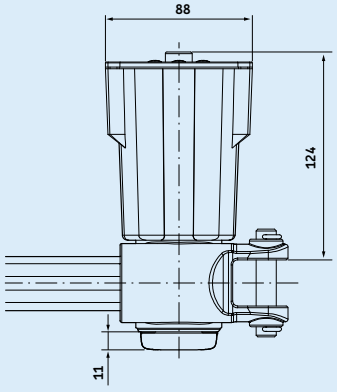

Encoder option E2

2-Hall encoder

Fig. 1

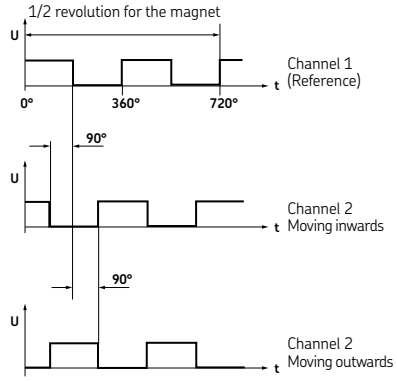

Output signals from channel 1 and 2 when the actuator is moving inwards and outwards respectively.
Note! Only half a revolution for the motor/ magnet is shown in the timing diagram.

Fig. 2

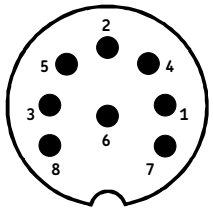

Pin configuration for the 8-pin DIN-plug of U-type. View is from the pin side (front).

Actuator version	Resolution/pulse
CARE 33A	0,75 mm
CARE 33H	3,175 mm
CARE 33M	1,50 mm

Table 2. Movement resolution.

Pin no	Color	Function
1	Green	Motor supply voltage +
2	Red	Motor supply voltage –
3	Black	Encoder supply voltage VCC
4	Red	Motor supply voltage –
5	Brown	Encoder supply voltage GND
6	White	Output channel 2
7	Green	Motor supply voltage +
8	Violet	Output channel 1

Table 3. Interface for the 8-pin DIN-plug. See figure 2 for pin configuration.
Motor's voltage polarity is stated for outward movement.

Parameter	Value
Supply voltage range (VCC)	min 4,5 to max 24 V DC
Max continuous output current	22 mA (open collector)
Temperature range °C	–20 to +70

Table 1. Recommended operating ratings.

Notes

Not able to find your type in this catalogue?

Please fill in this application list and return it to your local sales representative OR by email to actuators@skf.com.

Company: ..... Name of representative: .....

Tel.: ..... Email: .....

Dimensions

*Type: ☐ Linear actuator ☐ Pillar

*Stroke length: ..... mm
*Retracted length: ..... mm
*Attachment: ☐ Front ☐ Rear ☐ Other ☐ Plate (only for pillars)
Mounting: ☐ Vertical ☐ Horizontal ☐ Diagonal

Performance

*Linear speed: ..... mm/s at load ..... N
*Dynamic load capacity: Pull ..... N Push ..... N
*Static load capacity: Pull ..... N Push ..... N at max. stroke: ..... mm
*Eccentric load (only for pillars): Load offset ..... mm
*Influence of lateral (side) force: ☐ No ☐ Yes
*Self-locking: ☐ None ☐ In & Out ☐ In ☐ Out
*Lifetime: ..... cycles (in double stroke)
*Number of work cycles: ..... cycle/hour ..... hour/day ..... day/year ..... year
*Duty factor: ..... % at load ..... N

Motor type

*Motor voltage: ☐ 12/24V DC ☐ 230V AC/50Hz ☐ 120V AC/60Hz
Mode of control: ☐ Mains ☐ 24V DC ☐ Pneumatic
Overheating protection: ☐ Internal ☐ External ☐ No protection ☐ Self hold
Manual emergency operation: ☐ No ☐ Yes ☐ Quick-release

Miscellaneous

*Feedback: ☐ None ☐ Limit switches ☐ Potentiometer ☐ Encoder
Cable feedthrough (pillars): ☐ None ☐ Mains ☐ Other:
IP Protection: IP .....
*Ambient temperature: Lowest ..... °C Highest ..... °C
*Atmospheric-/ chemical influence: ☐ Indoor ☐ Outdoor ☐ Actuator is protected from rain
Humidity: ..... %
Vibrations: ☐ No ☐ Yes If yes Amplitude ..... mm Frequency ..... Hz
Max. noise: ..... dBa (distance 1 m)
Back-up nut: ☐ No ☐ Yes
Friction clutch: ☐ No ☐ Yes
Electrical protection class: ☐ I, grounded ☐ II, double isolation ☐ Safety low voltage
Quantity needed: Prototype ..... pcs Pre-series ..... pcs Series ..... pcs
Other customer requirements that cannot be defined above:

.....

.....

* mandatory fields

Notes



skf.com