21101-705 FRONT PANEL EMC STAINLESS STEEL SHIELDING KIT, 3 U; 10 PIECES

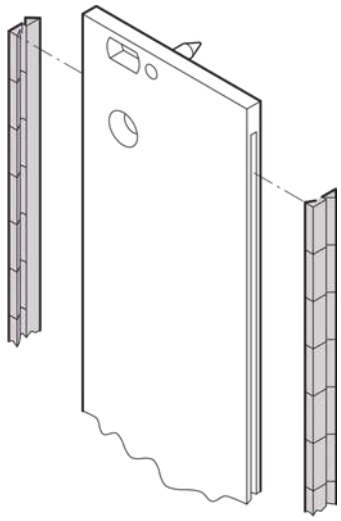

KEY FEATURES

The stainless steel EMC gaskets are inserted into the lateral slots of the shieldable front panels (2 pieces per front panel)

EMC contact strip, stainless steel

Temperature range -200 °C ... +160 °C

PRODUCT ATTRIBUTES

Product Type: Shielding Kit

Product Family: EuropacPRO; RatiopacPRO; RatiopacPRO AIR; PropacPRO; Frame Type Plug-In Unit

Rack Height: 3 U

Material: Stainless Steel

Package Quantity: 10

Height: 97 mm

Depth: 2.22 mm

Width: 4.97 mm

ADDITIONAL PRODUCT DETAILS

The stainless steel EMC gaskets are inserted into the lateral slots of the shieldable front panels (2 pieces per front panel).

Please order assembly tool separately.

CERTIFICATIONS



North America
All locations
+1.763.422.2661
Chat with us:
schroff.nvent.com

Europe
Straubenhardt, Germany
+49.7082.794.0
Betschdorf, France
+33.3.88.90.64.90
Warsaw, Poland
+48.22.209.98.35
Assago, Italy
+39.02.932.7141
Chat with us:
schroff.nvent.com

Asia
Shanghai, China
+86.21.2412.6943
Qingdao, China
+86.532.8771.6101
Singapore
+65.6768.5800
Shin-Yokohama, Japan
+81.45.476.0271
Chat with us:
schroff.nvent.com

Middle East & India
Dubai, United Arab Emirates
+971.4.378.1700
Bangalore, India
+91.80.6715.2001
Istanbul, Turkey
+90.216.250.7374
Chat with us:
schroff.nvent.com

nVent

Our powerful portfolio of brands:
nVent.com CADDY ERICO HOFFMAN RAYCHEM SCHROFF TRACER

© 2024 nVent. All nVent marks and logos are owned or licensed by nVent Services GmbH or its affiliates. All other trademarks are the property of their respective owners.

nVent reserves the right to change specifications without notice.