OG (Clip) 5x20 / 6.3x32

Clip, 5 x 20 / 6.3 x 32 mm, UR





Variant 2

600 VAC/DC · 16 A (UL/CSA)

Description
- Clip-material: bronze or brass
- Fuse block accepts 5x20 or 6.3x32 fuse-links

Standards
- UL 4248-1
- CSA 22.2 no. 4248-1

Approvals
- UL File Number: E39328

Weblinks
pdf-datasheet, html-datasheet, General Product Information, Approvals, CE declaration of conformity, RoHS, CHINA-RoHS, REACH, e-Shop, SCHURTER-Stock-Check, Distributor-Stock-Check, Detailed request for product

Technical Data

Fuse-Link	5 x 20 or 6.3 x 32 mm
Mounting	PCB
Terminal	Solder THT
Rated Voltage	600 VAC/DC
Rated current	16 A (UL/CSA)
Admissible Ambient Air Temp.	-40 °C to 85 °C
Climatic Category	40/085/21 acc. to IEC 60068-1
Material: Terminals	see variants
Unit Weight	0.98 g
Storage Conditions	0 °C to 60 °C, max. 70% r.h.
Product Marking	, Approvals

Soldering Methods	Wave
Solderability	245 °C / 3 sec acc. to IEC 60068-2-20, Test Ta, method 1
Resistance to Soldering Heat	260 °C / 10 sec acc. to IEC 60068-2-20, Test Tb, method 1A
Contact Resistance	< 10 mΩ at 20 mV

Dimension

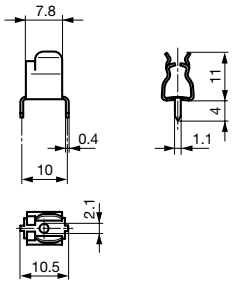

Variant 0751.0056

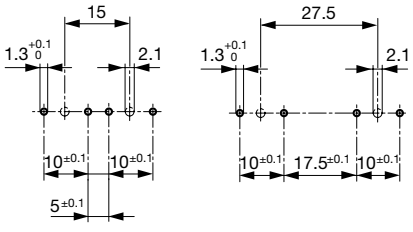

5 x 20 mm

6.3 x 32 mm

Drilling holes variant 0751.0056

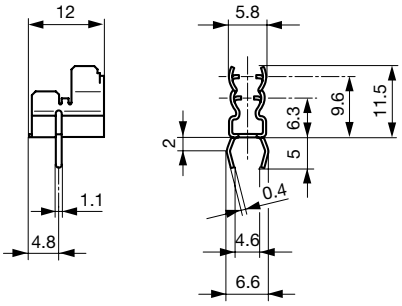

Variant 2 0751.0099, 0751.0100, 0751.0141 and 0751.0142

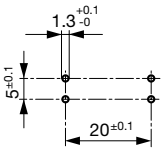

Drilling diagram variant 2 0751.0099, 0751.0100, 0751.0141 and 0751.0142

All Variants

Clip	Terminal	Material: Terminals	Order Number	
●	Straight	Tin-Plated Bronze	0751.0056	
●	Kicked	Tin-Plated Bronze	0751.0099	
●	Kicked	Tin-Plated Brass	0751.0100	
●	Straight	Tin-Plated Bronze	0751.0141	
●	Straight	Tin-Plated Brass	0751.0142	

Most Popular.

Availability for all products can be searched real-time:http://www.schurter.com/en/Stock-Check/Stock-Check-SCHURTER

Packaging Unit Bulk (1000 pcs.)

28.04.2015

The specifications, descriptions and illustrations indicated in this document are based on current information. All content is subject to modifications and amendments. Information furnished is believed to be accurate and reliable. However, users should independently evaluate the suitability and test each product selected for their own applications.