Rocker Switch

Single and Double Pole

RR Series



Features

- Lighted and non-lighted versions
- Industry standard cutout
- RoHS Compliant
- Minimum 100,000 operations mechanical life

Standard Parts[1]

North America

RRA22H3BBALN RRA22H3BBRLN RRA22H3BBGLN RRA22H3FBRNN RRA22H3BBRHN
RRA32H3BBRLN

North America and Europe

RRA22H3BBBNN RRA32H3FBBNN

Europe

RRA22H3FBBNN RRA32H3BBRLN RRA32H3BBBNN RRA32H3BBGEN RRA32H3BBREN
RRA32H3BBGLN

[1]The part number configuration matrix below provides details to the part numbers above.
For configurable part numbers that are not listed above, not listed in your region, or for custom part numbers, contact the factory or your distributor.

Part Number Breakdown

RRA22H3FBBNN

RR A 2 2 H 3

Series	Contact Rating[2]	Circuitry	Switch Function	Terminal Type	Actuator Type
RR	A	2 Single pole 3 Double pole	2 ON-OFF	H 4.8 mm (0.187”) solder tag M PC thru-hole straight	3 Round

[2]See Electrical Specifications section

F B B N N

Actuator Marking	Housing Color	Actuator Color	Lighted	Body Type
B Blank D OFF ON E O I F O – G •	B Black E Charcoal Grey W White Y Grey	A Amber B Black E Charcoal Grey G Green R Red W White Y Grey	N Non-lighted E 250 VAC bulb L 125 VAC bulb G 24 VDC bulb[3] H 12 VDC bulb[3]	N[4] No rocker boot

[3]Switches have no agency DC ratings
[4]A splash-proof boot can be ordered separately as part number 00150751

Electrical Specifications

Inrush Rating	24 A		
Dielectric Strength	1000 VAC for 1 minute		
Insulation Resistance	100 MΩ min at 500 VDC		
Initial Contact Resistance	0.020 Ω max		
Switch Function: 2	EN61058-1: 10 (4) A 250 V~ T125/55	UL Gen Purpose 1054: 10 A 125 VAC / 8 A 250 VAC	UL HP: ¼ HP 125 / 250 VAC
Electrical Life at Rated Load Minimum Operations UL File No: E23301	VDE: 10,000	UL: 6,000	

Material and Environmental Specifications

Actuator	Nylon 66 94V-2
Base	Nylon 66 94V-2
Spring	Steel Wire
Contacts	Silver Alloy
Movable Arm	Copper Alloy
Terminals	Tin-Plated Copper Alloy
Operating Temperature Range	-20 ^{O}C to +65 ^{O}C (-4 ^{O}F to +149 ^{O}F)

Circuitry and Switch Functions

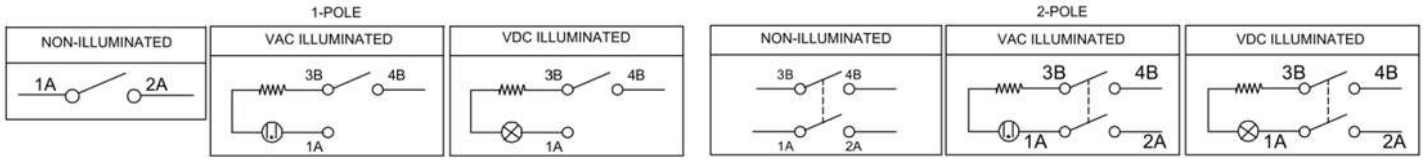

Dimensions mm (inches)

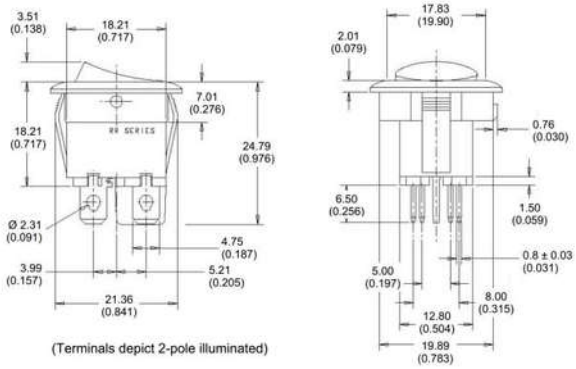

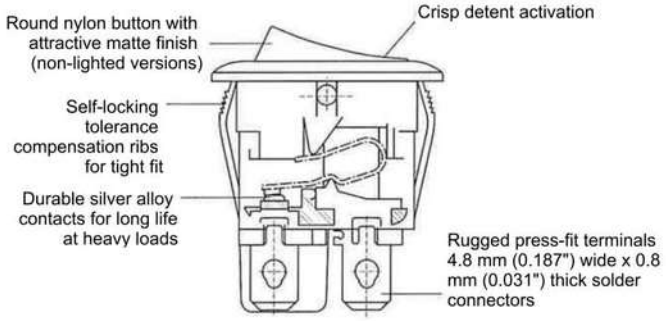

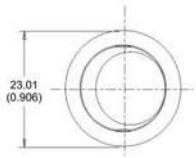

NOTE: ALL TOLERANCES ±0.3 (0.012) UNLESS OTHERWISE SPECIFIED

