IQ2012

Inductive sensor

IQ23008BBPKG/K1/0.3M/PUR/US

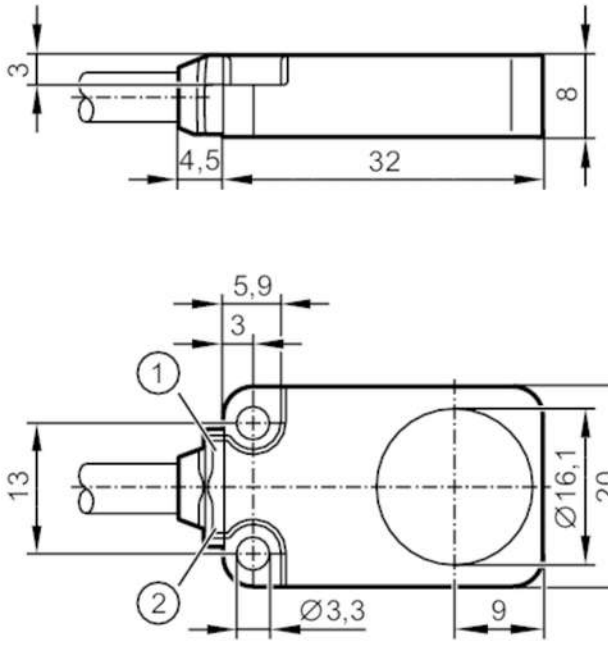

1 LED green
2 LED yellow

Product characteristics		
Electrical design		PNP
Output function		normally open
Sensing range	[mm]	8
Housing		rectangular
Dimensions	[mm]	20 x 8 x 32
Application		
Special feature		Drag chain suitability; Increased sensing range
Electrical data		
Operating voltage	[V]	10...30 DC
Current consumption	[mA]	< 20
Protection class		III
Reverse polarity protection		yes
Outputs		
Electrical design		PNP
Output function		normally open
Max. voltage drop switching output DC	[V]	2.5
Permanent current rating of switching output DC	[mA]	100
Switching frequency DC	[Hz]	2000
Short-circuit protection		yes
Overload protection		yes

IQ2012

Inductive sensor

IQ23008BBPKG/K1/0.3M/PUR/US

Detection zone			
Sensing range	[mm]	8	
Real sensing range Sr	[mm]	8 ± 10 %	
Operating distance	[mm]	0...6.48	
Increased sensing range		yes	
Accuracy / deviations			
Correction factor		steel: 1 / stainless steel: 1 / brass: 1 / aluminium: 1 / copper: 1	
Hysteresis	[% of Sr]	3...15	
Switch point drift	[% of Sr]	-10...10	
Operating conditions			
Ambient temperature	[°C]	-40...85	
Protection		IP 65; IP 66; IP 67; IP 68	
Tests / approvals			
EMC		EN 61000-4-2 ESD	4 kV CD / 8 kV AD
		EN 61000-4-3 HF radiated	10 V/m
		EN 61000-4-4 Burst	2 kV
		EN 61000-4-6 HF conducted	10 V
		EN 55011	class B
Vibration resistance		EN 60068-2-6 Fc	20 g (10...3000 Hz) / 50 sweep cycles, 1 octave per minute, in 3 axes
Shock resistance		EN 60068-2-27 Ea	100 g 11 ms half-sine; 3 shocks each in every direction of the 3 coordinate axes
Continuous shock resistance		EN 60068-2-27	40 g 6 ms; 4000 shocks each in every direction of the 3 coordinate axes
Fast temperature change		EN 60068-2-14 Na	TA = -40°C; TB = 85°C; t1 = 30 min; t2 = < 10 s 50 cycles
MTTF	[years]	1084	
UL approval		Ta	-40...60 °C
		Enclosure type	Type 1
		power supply	Limited Voltage/Current
		UL Approval no.	A020
		File number UL	E174191
Mechanical data			
Weight	[g]	41.4	
Housing		rectangular	
Mounting		flush mountable	
Dimensions	[mm]	20 x 8 x 32	
Materials		diecast zinc special coating; sensing face: LCP natural; LED window: TPU; potting: PUR	
Drag chain suitability		yes	
Drag chain suitability		bending radius for flexible use	min. 10 x cable diameter
		bending cycles	> 5 Mio.
Displays / operating elements			
Display		Display operation	1 x LED, green
		switching status	1 x LED, yellow
Remarks			
Pack quantity		1 pcs.	

IQ2012

Inductive sensor

IQ23008BBPKG/K1/0.3M/PUR/US

Electrical connection

Cable: 0.3 m, PUR, Ø 4.9 mm; 3 x 0.34 mm²

Connector: 1 x M12; coding: A

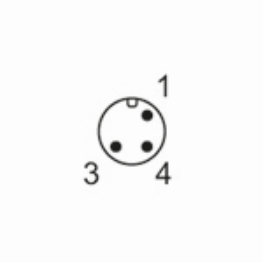

Connection

