FEMALE END VIEW

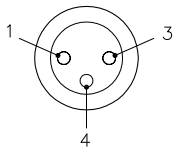

1 = BROWN
3 = BLUE
4 = BLACK

pico fast.

SPECIFICATIONS

CONTACT CARRIER MATERIAL/COLOR	NYLON OR TPU/BLACK
CONTACT MATERIAL/PLATING	BRASS/GOLD
COUPLING NUT MATERIAL/PLATING	BRASS/NICKEL
O-RING MATERIAL	VITON
RATED CURRENT [A]	4.0 A
RATED VOLTAGE [V]	125 VAC/VDC
CONDUCTOR INSULATION MATERIAL	PVC
NUMBER OF CONDUCTORS [AWG]	3x24 AWG
TEMPERATURE RANGE	-40°C to +105°C (-40°F to +221°F)
PROTECTION CLASS	MEETS NEMA 1,3,4,6P AND IEC IP67

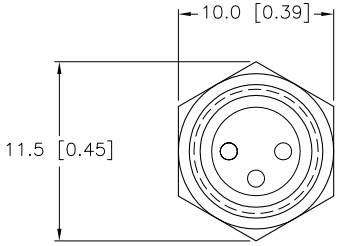

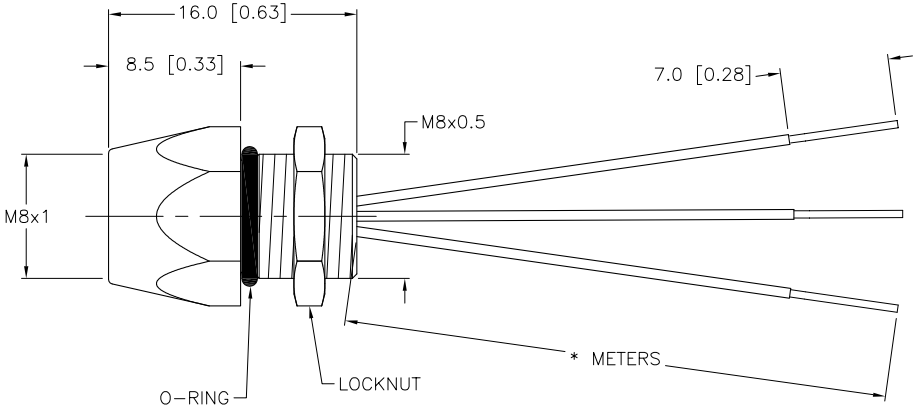

CABLE LENGTH	TOLERANCE
ALL LENGTHS	+ 4% (OR 50mm) OF LENGTH - 0% (OR 0mm) OF LENGTH WHICHEVER IS GREATER

STRIP LENGTH	TOLERANCE
0-7mm	±0.5mm
8-29mm	±1.0mm
30-49mm	±2.0mm
50-69mm	±3.0mm
70-100mm	±4.0mm
OVER 100mm	±5.0mm

NOTES:

1. "*" INDICATES LEAD LENGTH IN METERS. CONTACT TURCK TO ORDER SPECIFIC LENGTHS.

SOURCE DRAWING - FOR REFERENCE ONLY

REV	DESCRIPTION	BY	DATE	ECO NO.
B	DRAWING PROCESSED AS PART OF ECO 33971	CBM	04/06/11	33971

RELATED DOCUMENTS
1.
2.
3.
4.

3RD ANGLE PROJECTION

THIS DRAWING IS PROPERTY OF TURCK INC. USE OF THIS DOCUMENT WITHOUT WRITTEN PERMISSION IS PROHIBITED.

TURCK INC
High Technology Sensors and Automation Controls
3000 CAMPUS DRIVE
MINNEAPOLIS, MN 55441
1-800-544-7769
(763) 553-7300
(763) 553-0708 fax
turck.com

MATERIAL: SEE SPECIFICATIONS

FINISH: SEE SPECIFICATIONS

ALL DIMENSIONS DISPLAYED ON THIS DRAWING ARE FOR REFERENCE ONLY

CONTACT TURCK FOR MORE INFORMATION

DRFT: RWC | DATE: 07/09/07
DSGN: | SCALE: 1=.5

UNIT OF MEASUREMENT
MILLIMETER [INCH]
DO NOT SCALE THIS DRAWING

DESCRIPTION: MFKS 3-*

IDENTIFICATION NO.:

REV: B

FILE: 777009657

SHEET 1 OF 1