E60210

Reducing bush

REDUCING SLEEVE FOR RO3 ROP15-14MM

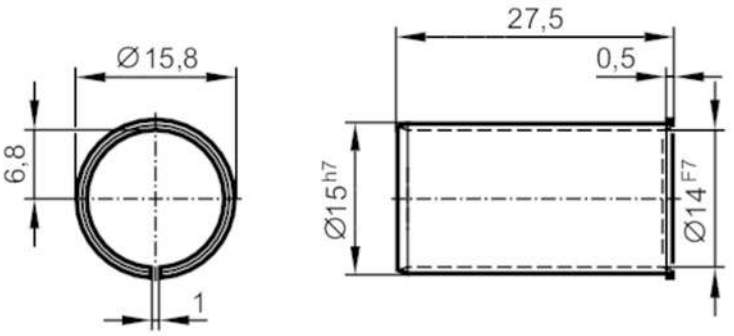

Application		
Design		for hollow shaft encoders
Mechanical data		
Weight	[g]	6.8
Inside diameter	[mm]	14
External diameter	[mm]	15
Materials		stainless steel (1.4305 / 303)
Length	[mm]	27.5
Remarks		
Pack quantity		1 pcs.