DATASHEET - M22-PVL30/FK02/RG/FIY1



Housing, Controlled stop pushbuttons/emergency-stop buttons, Mushroom-shaped, 30 mm, Illuminated with LED element, Pull-to-release function, 2 NC, Cage Clamp, Red, Yellow

Powering Business Worldwide

Part no. M22-PVL30/FK02/RG/FIY1
Catalog No. 199354

Delivery program

Product range			RMQ-Titan
Basic function			Housing Controlled stop pushbuttons/emergency-stop buttons
Mounting hole diameter	∅	mm	22.5
Single unit/Complete unit			Complete unit
Design			Mushroom-shaped
Diameter	∅	mm	30
Illumination			Illuminated with LED element
			Pull-to-release function
Connection type			Cage Clamp
Description			Tamper-proof according to ISO 13850/EN 418 Cage Clamp is a registered trademark of Wago Kontakttechnik GmbH/Minden, Germany Pull to release
Number of locations		Qty.	1
Colour			
Mushroom head			Red
			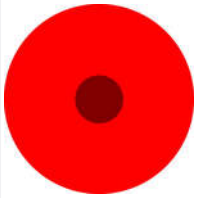
Base			yellow
Enclosure covers			Yellow
LED			red/green
Degree of Protection			IP65, IP66, IP69
Connection to SmartWire-DT			no
Contacts			
N/C = Normally closed			2 NC
Notes			= safety function, by positive opening to IEC/EN 60947-5-1
Actuator travel and actuation force as per DIN EN 60947-5-1, K.5.4.1			
	mm		5.5
Maximum travel	mm		5.8
Contact sequence			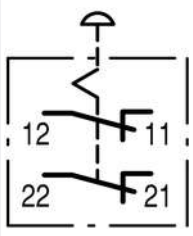
Positive opening (ZW)			yes

Technical data

General

Standards			IEC/EN 60947

			VDE 0660
certificate			CE, EAC UL, CSA, CCC
Lifespan, mechanical	Operations		70000
Operating frequency	Operations/h		≦ 600
Actuating force		n	≦ 50
Climatic proofing			Damp heat, constant, to IEC 60068-2-78 Damp heat, cyclic, to IEC 60068-2-30
Degree of Protection			IP65, IP66, IP69
Ambient temperature			
Open		°C	-25 - +70
Mounting position			As required
Mechanical shock resistance		g	50 Shock duration 11 ms Sinusoidal according to IEC 60068-2-27
Terminal capacities		mm^2	
Solid		mm^2	2 x 1 (0.2 - 1.5) 2 x 1 (075 - 1.5) Can be plugged without tools
Flexible with ferrule		mm^2	2 x 1 (0.25 - 1) Use WAGO Variocrimp 4 crimping tool; please enquire for others
Solid or stranded		AWG	2 x 1 (24 - 16)
shipping classification			DNV GL LR
			

Contacts

Rated conditional short-circuit current	I_q	kA	1
Overvoltage category/pollution degree			III/3
Max. short-circuit protective device			
Fuseless		Type	FAZ-B4
Fuse	gG/gL	A	4

Design verification as per IEC/EN 61439

Technical data for design verification			
Operating ambient temperature min.		°C	-25
Operating ambient temperature max.		°C	70

Technical data ETIM 7.0

Low-voltage industrial components (EG000017) / Control circuit devices combination in enclosure (EC000225)

Electric engineering, automation, process control engineering / Low-voltage switch technology / Command and alarm device / Command and alarm device combination in housing (ecl@ss10.0.1-27-37-12-16 [AKF034014])

Number of command positions			
Number of push buttons			
Number of indicator lights			
Number of key switches			
Number of selector switches			
Number of mushroom-shaped push-buttons			
Suitable for emergency stop			
Rated control supply voltage Us at AC 50HZ		V	
Rated control supply voltage Us at AC 60HZ		V	
Rated control supply voltage Us at DC		V	
Colour housing cover			

Material housing	
Number of contacts as normally open contact	
Number of contacts as normally closed contact	
Number of contacts as change-over contact	
Degree of protection (IP)	
Degree of protection (NEMA)	

Approvals

Product Standards	IEC/EN 60947-5; UL 508; CSA-C22.2 No. 14-05; CSA-C22.2 No. 94-91; CE marking
UL File No.	E29184
UL Category Control No.	NKCR
CSA File No.	012528
CSA Class No.	3211-03
North America Certification	UL listed, CSA certified

Dimensions

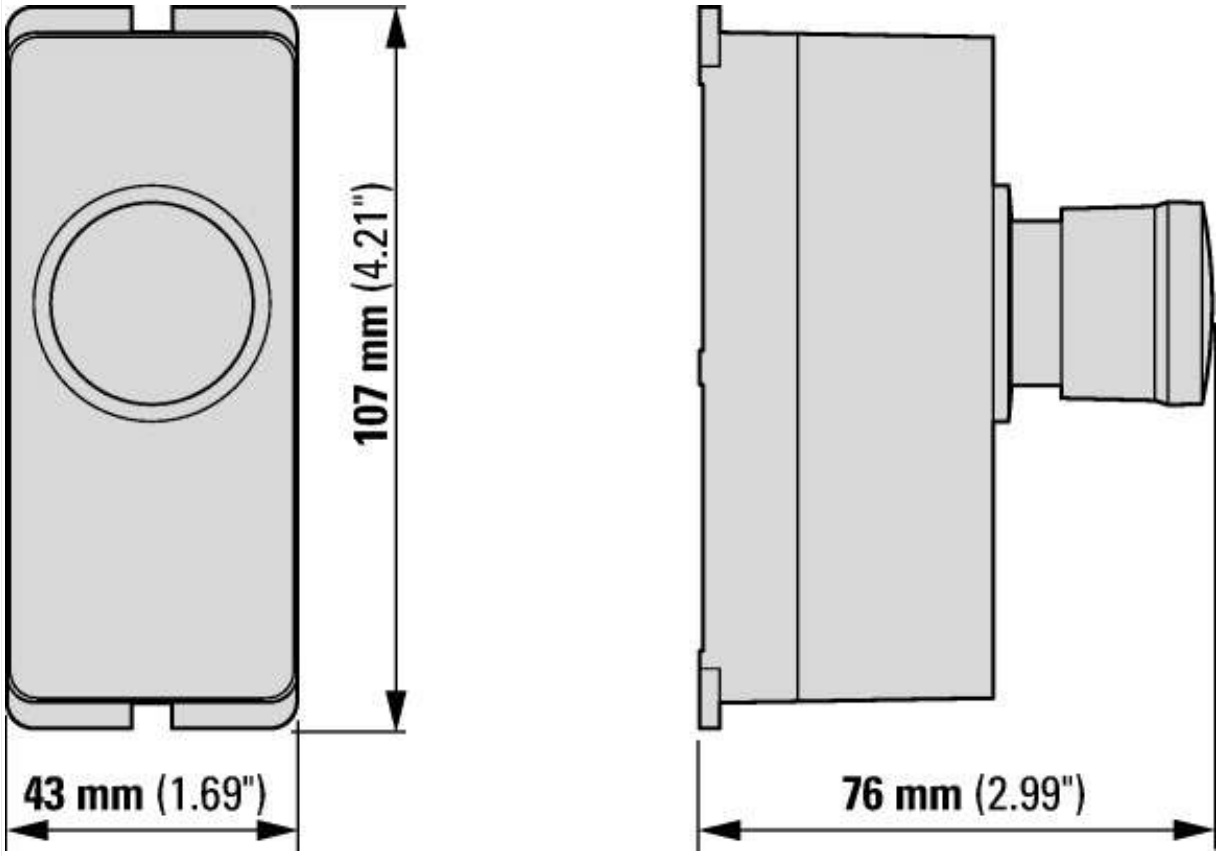

© 10/2021 by Eaton Industries GmbH