DATASHEET - CI-K1-95-TS



Insulated enclosure, HxWxD=120x80x95mm, +mounting rail

Part no. CI-K1-95-TS
Catalog No. 206881

EL-Nummer (Norway) 0004138000

Delivery program

Product range			CI-K small enclosures
Basic function			Basic enclosures
Product function			CI-K empty enclosures
Single unit/Complete unit			Single unit
Degree of Protection			Front IP65 IP65, with push-through cable entry
Degree of Protection			Front IP65 IP65, with push-through cable entry
Material			Glass-fibre reinforced polycarbonate
Colour			Enclosure base RAL 9005, black Operator only RAL 7035, light gray
Description			Metric cable entry knockouts top, bottom and in the back plate Push-through cable entry diaphragm Lamp indicator L-… can be mounted in base knock-out M20/M25
Cable entry			Push-through cable entry diaphragm
Dimensions			
Width		mm	80
Height		mm	120
Depth		mm	95
Dimensions		mm	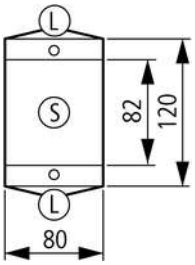
Enclosure depth			
Legend for the graphic			Dimensions from top: Mounting depth with mounting plate Mounting depth for mounting rail 7.5 mm height Mounting depth for mounting rail 15 mm height
Enclosure depth		mm	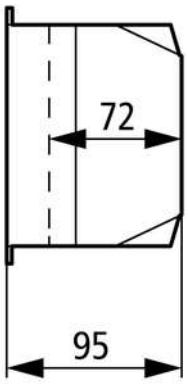
Mounting depth for mounting rail 7.5 mm height		mm	72
Features			With mounting rail to IEC/EN 60715

Notes
L

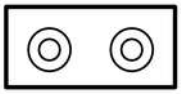

Knockouts
2 X M20 or push-through membrane up to max. ∅ 12 mm

S

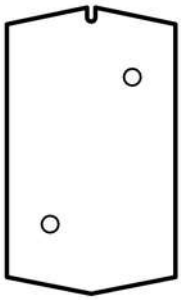

Back plate:
2 x push-through membrane up to max. ∅ 8mm

Technical data

General

Standards		IEC/EN 60529 DIN EN 62208
Climatic proofing		Damp heat, constant, to IEC 60068-2-78 Damp heat, cyclic, to IEC 60068-2-30
Ambient temperature	°C	-25 - +70 -25 - +40 (with push-through cable entry)
Degree of Protection		Front IP65 IP65, with push-through cable entry
Power loss		
Max. radiated heat dissipation with separate mounting, ambient air temperature +20 °C	W	10

Material characteristics

Material		
Base		Glass-fibre reinforced polycarbonate
Cover		Glass-fibre reinforced polycarbonate
Surface treatment		Resistant to corrosion
Colour		
Base		RAL 9005, black (matt)
Housing body		Enclosure cover RAL 7035, light grey (matt)

Material properties

Electrical		
Track resistance		CTI 175 (base, to IEC 60112) CTI 175 (cover, to IEC 60112)
Surface resistance to IEC 60093	Ω x 10^{13}	1
Dielectric strength to IEC 60243-1	kV/mm	30
Thermal		
Temperature resistant		-40 °C - 120 °C (enclosure) -40 °C - +80 °C (gasket)
Mechanical		
Impact resistance		IK04 according to EN 50102
max. assembly weights		
Mounting plate	kg	0.5
Mounting rail	kg	0.5
Chemical resistance		
Chemical resistant		Base, Cover Resistant against: Acids < 10 %, mineral oil, alcohol, gasoline, greases, salt solutions Partly resistant to: Acids > 10 %, alcohol Not resistant to: alkalis, benzene Push-through membrane (CI-K1/CI-K2) and sealing material Resistant against: Acids < 10 %, alkalis, benzene, salt solutions Partly resistant to: Acids > 10 %, greases, benzene Not resistant to: Mineral oil, benzene
Atmospheric		
Saline spray		IEC 60068-2-11
UV resistance		Beneath protective shield
Water consumption to DIN EN ISO 62	%	0.29
Flammability characteristics		

Glow wire test		
Flammability characteristics		960 °C/1mm thickness (base, cover; glow wire to VDE 0471 Part 2) 650 °C/1mm thick (push-through membrane and seal material) to VDE 0471 Part 2)
to UL 94		VO/1.5 mm thickness
to UL 94		HB
Halogen free		Yes

Design verification as per IEC/EN 61439

Technical data for design verification		
Operating ambient temperature min.	°C	-25
Operating ambient temperature max.	°C	70
Degree of Protection		Front IP65 IP65, with push-through cable entry
Max. radiated heat dissipation with separate mounting, ambient air temperature +20 °C	W	10
Flammability characteristics		960 °C/1mm thickness (base, cover; glow wire to VDE 0471 Part 2) 650 °C/1mm thick (push-through membrane and seal material) to VDE 0471 Part 2)
Track resistance		CTI 175 (base, to IEC 60112) CTI 175 (cover, to IEC 60112)
Surface treatment		Resistant to corrosion
Impact resistance		IK04 according to EN 50102
Temperature resistant		-40 °C - 120 °C (enclosure) -40 °C - +80 °C (gasket)
UV resistance		Beneath protective shield
IEC/EN 61439 design verification		
10.2 Strength of materials and parts		
10.2.2 Corrosion resistance		Meets the product standard's requirements.
10.2.3.1 Verification of thermal stability of enclosures		Meets the product standard's requirements.
10.2.3.2 Verification of resistance of insulating materials to normal heat		Meets the product standard's requirements.
10.2.3.3 Verification of resistance of insulating materials to abnormal heat and fire due to internal electric effects		Meets the product standard's requirements.
10.2.4 Resistance to ultra-violet (UV) radiation		Please enquire
10.2.5 Lifting		Not applicable.
10.2.6 Mechanical impact		Does not apply, since the entire switchgear needs to be evaluated.
10.2.7 Inscriptions		Meets the product standard's requirements.
10.3 Degree of protection of ASSEMBLIES		Meets the product standard's requirements.
10.4 Clearances and creepage distances		Meets the product standard's requirements.
10.5 Protection against electric shock		Does not apply, since the entire switchgear needs to be evaluated.
10.6 Incorporation of switching devices and components		Does not apply, since the entire switchgear needs to be evaluated.
10.7 Internal electrical circuits and connections		Is the panel builder's responsibility.
10.8 Connections for external conductors		Is the panel builder's responsibility.
10.9 Insulation properties		
10.9.2 Power-frequency electric strength		Is the panel builder's responsibility.
10.9.3 Impulse withstand voltage		Is the panel builder's responsibility.
10.9.4 Testing of enclosures made of insulating material		Meets the product standard's requirements.
10.10 Temperature rise		The panel builder is responsible for the temperature rise calculation. Eaton will provide heat dissipation data for the devices.
10.11 Short-circuit rating		Is the panel builder's responsibility. The specifications for the switchgear must be observed.
10.12 Electromagnetic compatibility		Is the panel builder's responsibility. The specifications for the switchgear must be observed.
10.13 Mechanical function		The device meets the requirements, provided the information in the instruction leaflet (IL) is observed.

Technical data ETIM 7.0

Low-voltage industrial components (EG000017) / Empty enclosure for switchgear (EC000712)

Electric engineering, automation, process control engineering / Low-voltage switch technology / Component for low-voltage switching technology / Empty housing for switch devices (ecl@ss10.0.1-27-37-13-01 [AKN343014])

Material housing		Plastic
Width	mm	80

Height		mm	120
Depth		mm	95
With transparent cover			No
Suitable for emergency stop			Yes
Model			Surface mounting
Degree of protection (IP)			IP65
Degree of protection (NEMA)			Other

Dimensions

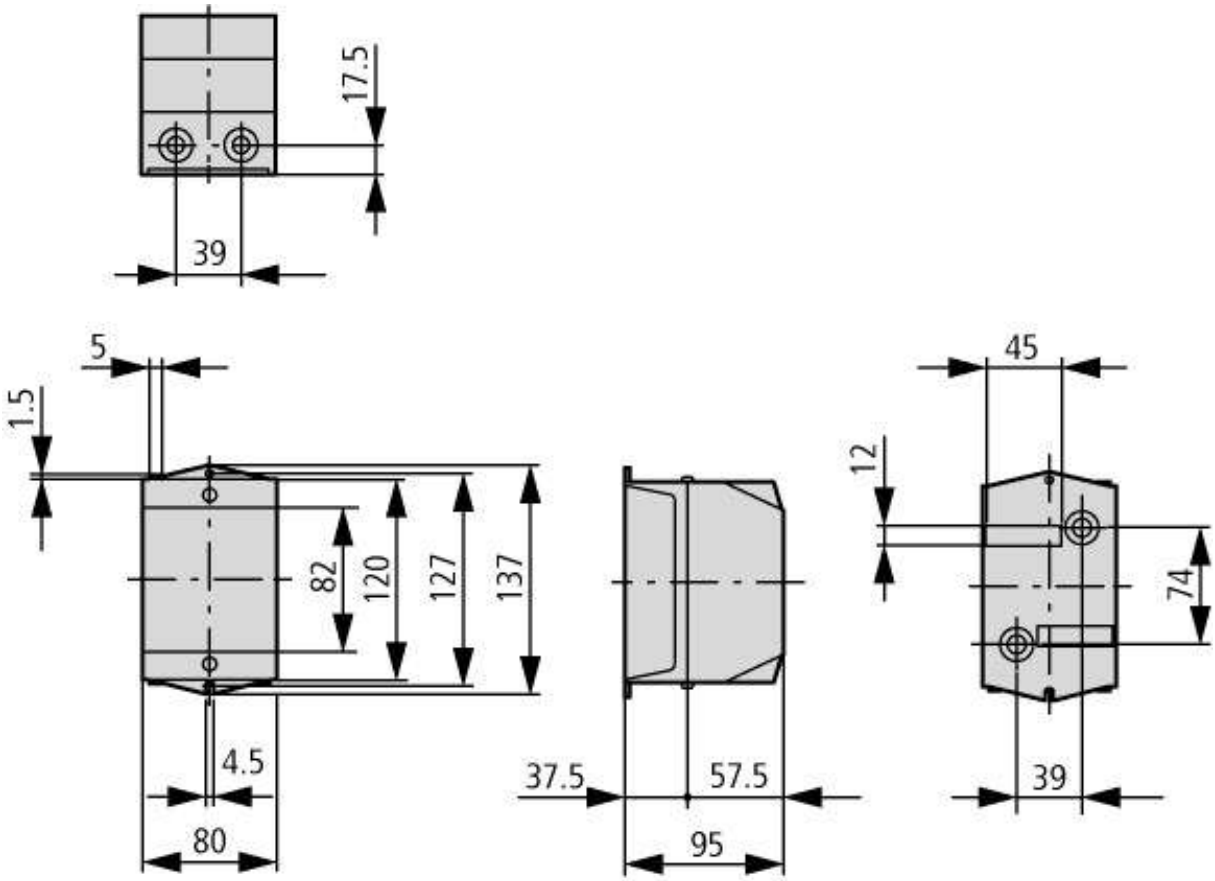

Additional product information (links)

IL01502081Z (AWA3210-1735) Insulated small enclosures

IL01502081Z (AWA3210-1735) Insulated small enclosures	https://es-assets.eaton.com/DOCUMENTATION/AWA_INSTRUCTIONS/IL01502081Z2018_05.pdf

© 04/2021 by Eaton Industries GmbH