efector120

ifm electronic

Accessories

E11817

Fixing strap for clean-line cylinders

Ø 16...20 mm

Piston diameter

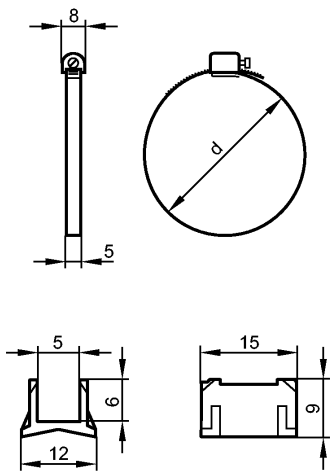

Made in Germany

Design		for types MKT
Piston diameter	[mm]	16...20
Clamping range d [mm]		18...29
Housing materials		adapter: PA (polyamide); Fixing strap: stainless steel (303S22)
Weight	[kg]	0.006
Accessories (included)		adapter for types MKT