RoHS Compliant

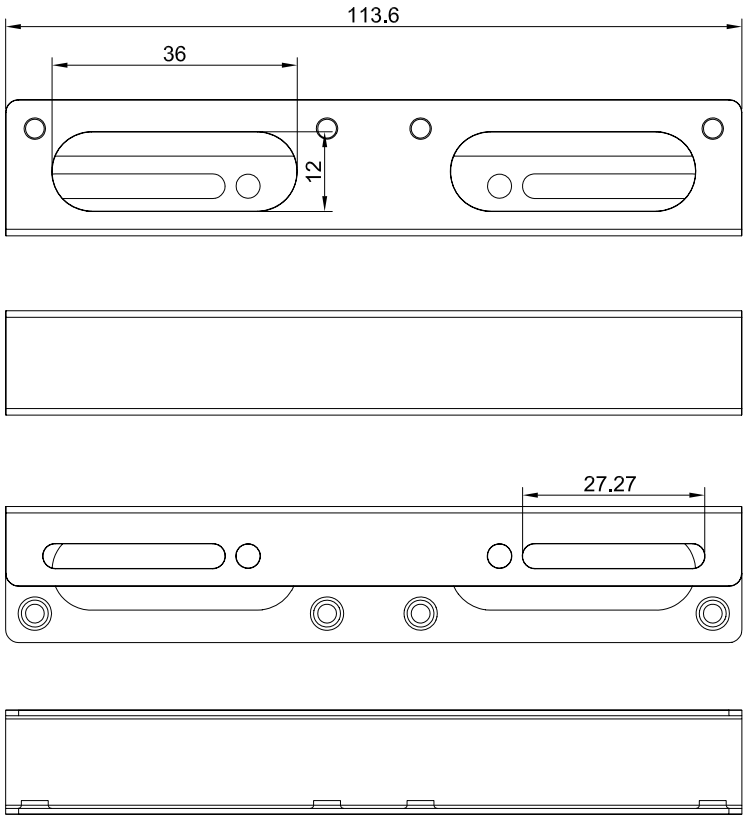

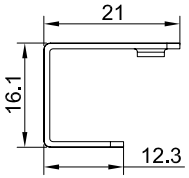

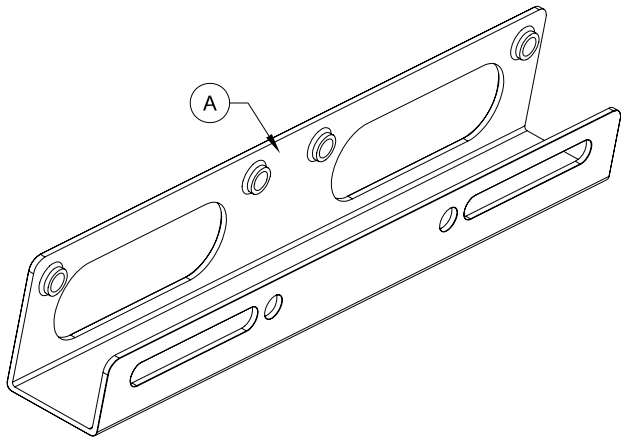

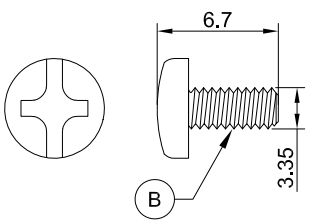

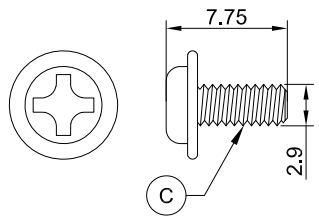

Dimension inspection :
1. According to the drawings required size inspection.
2. Measured : Screw lock case and lock 3.5/2.5 "Hard Drive".

NUMBER	BOM.NO	PRODUCT SPECIFICATIONS	Quantity	Unit
C		Screw : 7.75*2.9MM	4	PCS
B		Screw : 6.7*3.35MM	4	PCS
A		HDD Mounting Adapter Type 2.5 to 3.5, Bracket : 113.6*21*16.1MM	2	PCS

ROLINE HDD Mounting Adapter Type 3.5/2.5		
Item	16.01.3031	
Draw	Kobe	Date: 2014.11.24
Approval		
Duty	F16	
Sample NO.		Drawings of 1 (1) Proportion: 1:1 Unit(mm) A4

SECOMP