EY5021

Muting arm set

4P-THROUGH-MULTIBEAM-SENSORS

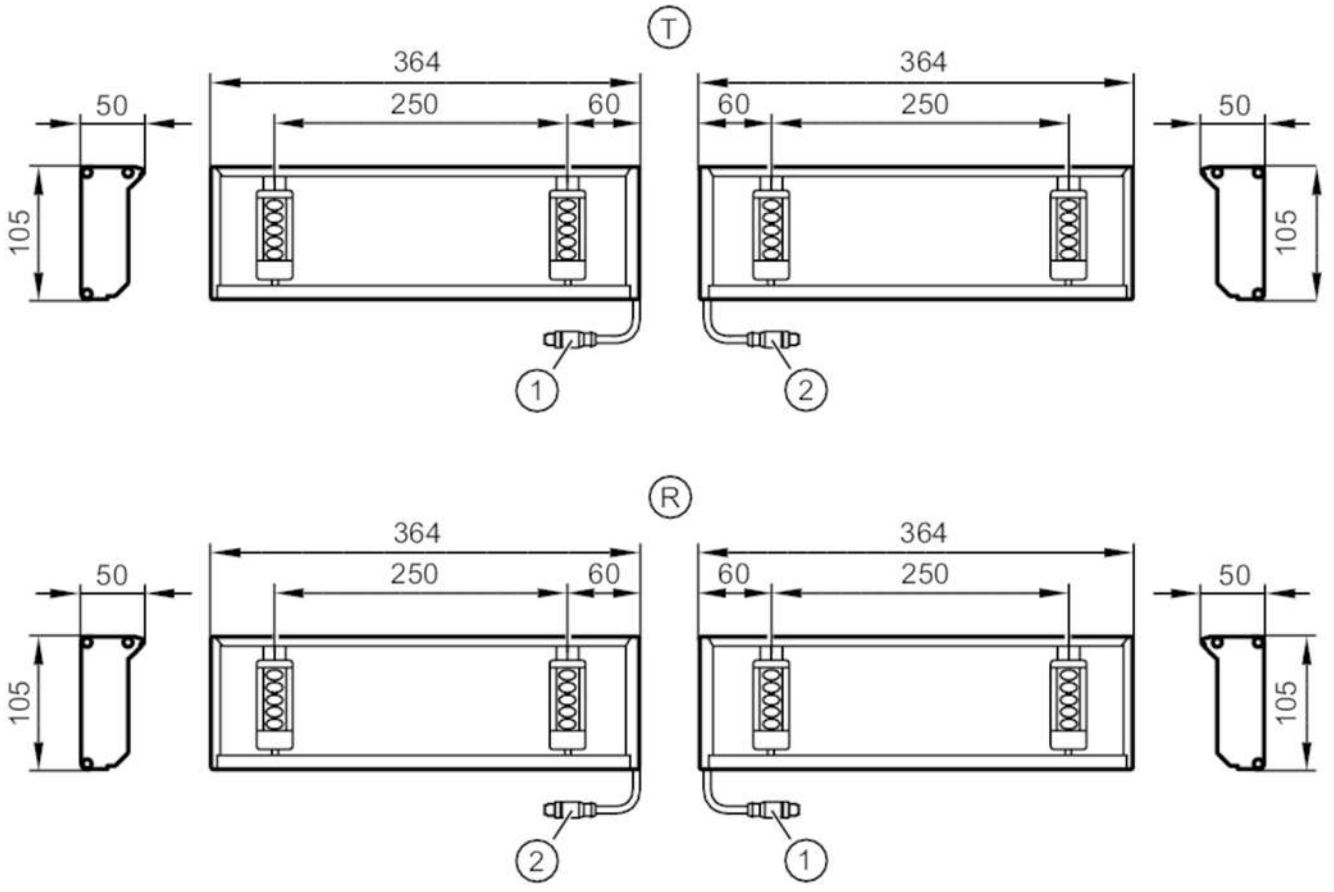

T transmitter
R receiver
1 plug blue
2 plug red

CE

Product characteristics		
Type of light		infrared light
Application		
Design		sequential muting with four parallel multi-beam light barriers
Function principle		Through-beam sensor
Electrical data		
Operating voltage	[V]	19.2...28.8 DC
Current consumption	[mA]	60
Protection class		III
Reverse polarity protection		yes
Type of light		infrared light
Wave length	[nm]	940
Outputs		
Electrical design		PNP
Output function		dark-on mode
Max. voltage drop switching output DC	[V]	0.5

EY5021

Muting arm set

4P-THROUGH-MULTIBEAM-SENSORS

Permanent current rating of switching output DC	[mA]	100	
Short-circuit protection		yes	
Overload protection		yes	
Detection zone			
Range	[m]	< 3.5	
Operating conditions			
Ambient temperature	[°C]	-30...55	
Protection		IP 65	
Tests / approvals			
EMC		EN 60947-5-2	
Mechanical data			
Weight	[g]	4295	
Materials		aluminium; polypropylene	
Lens material		polycarbonate-ABS	
Displays / operating elements			
Display		transmitter	LED, yellow
		receiver	LED, green/red
Remarks			
Pack quantity		4 pcs.	
Electrical connection - receiver 1			

Connector: 1 x M12; coding: A; Moulded body: blue

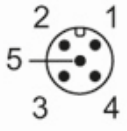

Connection

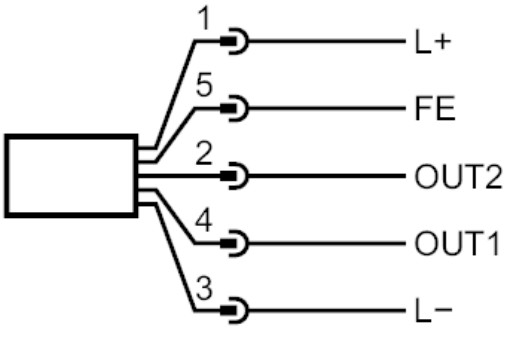

4 OUT 1	switching output
2 OUT 2	switching output

EY5021

Muting arm set

4P-THROUGH-MULTIBEAM-SENSORS

Electrical connection - receiver 2

Connector: 1 x M12; coding: A; Moulded body: red

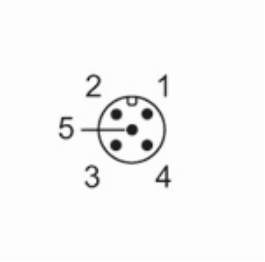

Connection

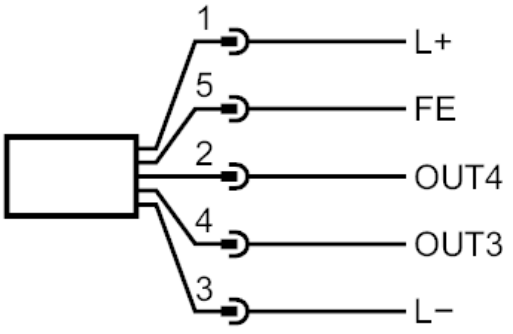

4 OUT 3	switching output
2 OUT 4	switching output

Electrical connection - transmitter 1

Connector: 1 x M12; coding: A; Moulded body: blue

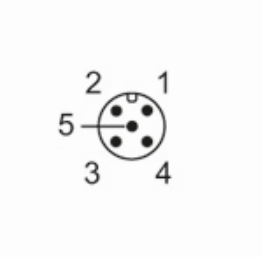

EY5021

Muting arm set

4P-THROUGH-MULTIBEAM-SENSORS

Connection

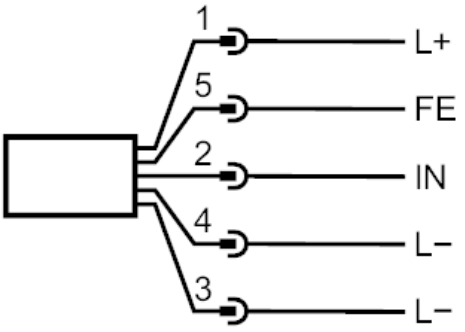

2 IN	Sync A

Electrical connection - transmitter 2

Connector: 1 x M12; coding: A; Moulded body: red

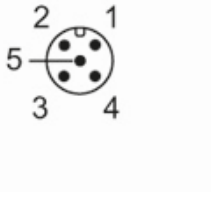

Connection

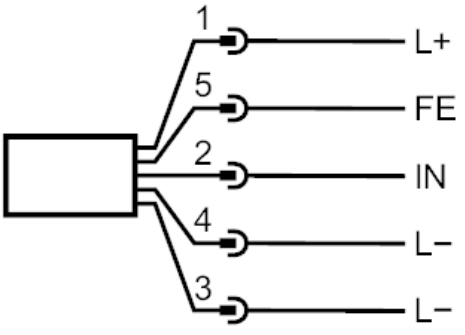

2 IN	Sync B