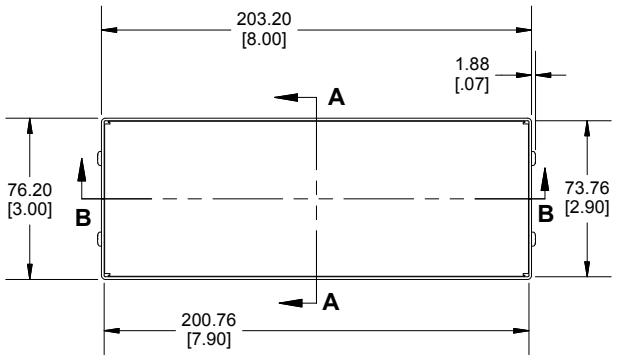

END VIEW

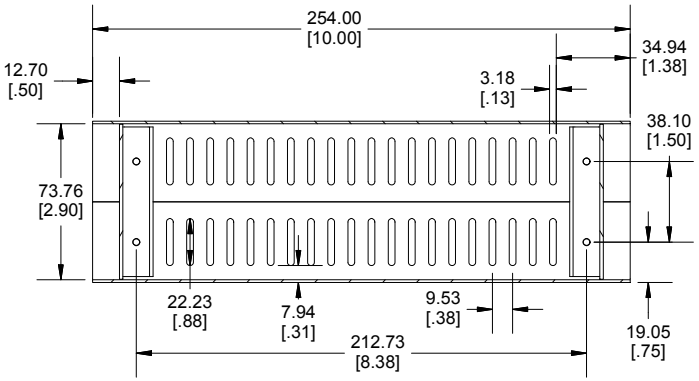

SECTION A-A
SIDE VIEW

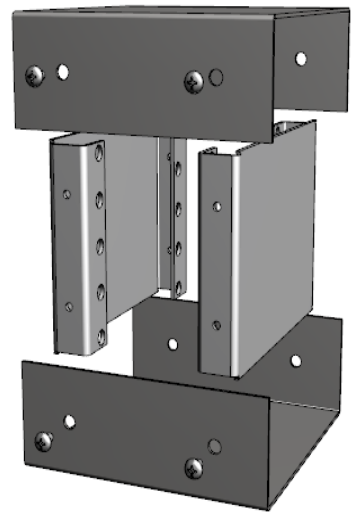

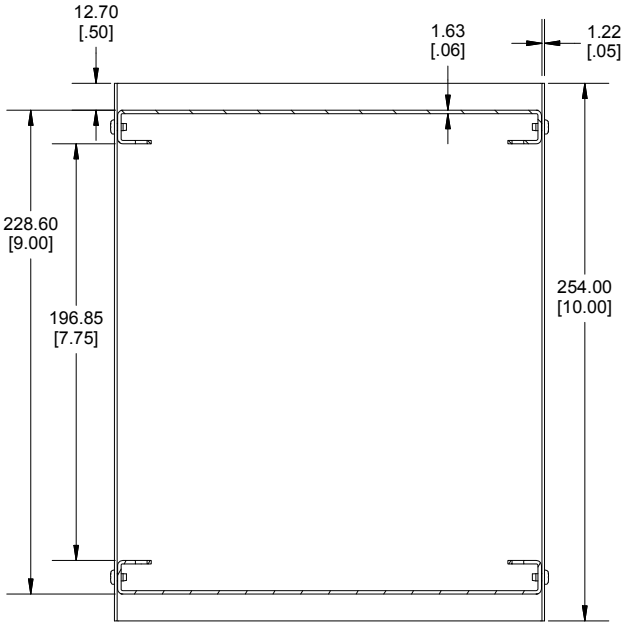

SECTION B-B
TOP VIEW

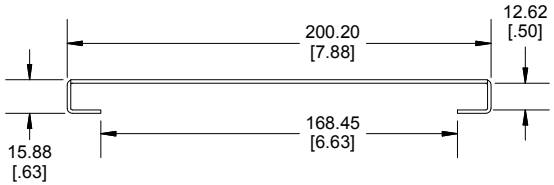

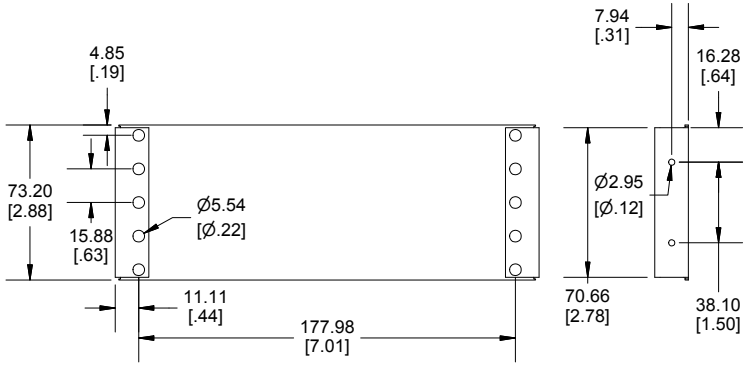

END PLATE

Enclosures can be Factory Modified (Milling, Drilling, Printing etc.)
Contact Factory (modshop@hammondmfg.com) for quotes
Solid models of this enclosure available in .stp or .x_t
(Part number and text placement/orientation on our products are subject to change, we do not recommend using them as a locating reference for modification purposes)

NOTE
Purchased assembly includes Top, Bottom, Black End Plate, Grey End Plate, 8 Enclosure screws, and 4 Rubber feet.
Recommended Cover screw torque 125-150 cN-m (11-13.3 lbf-in)

1458	
1458 Regular Enclosure	
Top / Bottom powder coated Gulf Blue RAL 5021	1458VE3B
Top / Bottom powder coated Black RAL 9011	1458VE3
ACCESSORIES	
Nickel plated Enclosure screws [#6-32 x 1/4"] Self-Tapping (Pkg 8)	1421J8
Rubber Feet (Pkg 24)	1421T3

Dimensions:
mm
[inches]

HAMMOND MANUFACTURING®

1458VE3

www.hammondmfg.com

REV: 09.10.2019