Your Expert Partner for **Human Machine Interfaces**

Actuator

Distribution by
Rs-online

704.206.700



https://rs-online.eao.com/component/704.206.7...

Your product:



704.206.700
Actuator

FRONT

Front dimension:	35 mm x 35 mm
Front form:	Square
Front bezel colour:	Black
Front bezel material:	Plastic

MOUNTING

Design:	Flush
Mounting cut-out:	30 mm x 30 mm
Mounting type:	Panel mounting

OPERATING-/INDICATION PART

Lens colour:	Colourless
Lens material:	Plastic
Lens shape:	Flush
Lens optics:	transparent
Marking plate colour:	White
Marking plate optics:	translucent
Marking plate illumination:	illuminative

ELECTRICAL CHARACTERISTICS

Standards:	The switches comply with the “Standards for low-voltage switching devices” DIN EN 60947-1

MECHANICAL CHARACTERISTICS

Terminal:	Screw terminal
Weight:	0.047 kg

AMBIENT CONDITION

IP Protection:	IP65 front side
Operating temperature:	– 40 °C ... + 55 °C
Storage temperature:	– 40 °C ... + 85 °C

CERTIFICATE

REACH:	REACH compliant
RoHS:	RoHS compliant

OTHER

Short Description:	Actuator, 30 mm x 30 mm, 35 mm x 35 mm, Flush, Colourless, Plastic, transparent, Square, Black, Plastic, Screw terminal
Housing colour:	Black
Housing material:	Plastic
Wiring diagrams:	

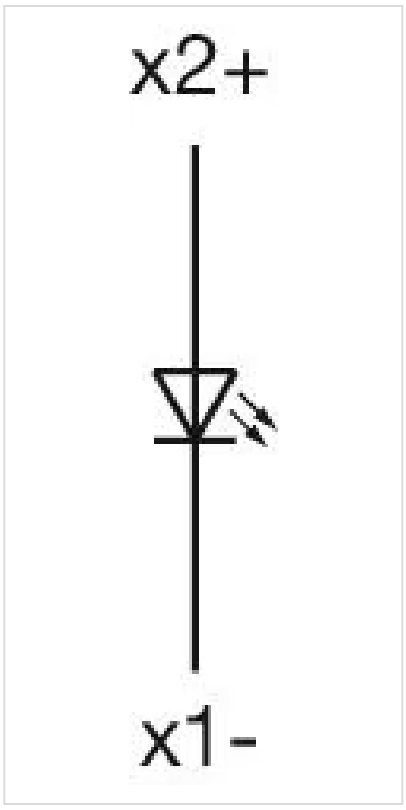

Mounting cut-outs:

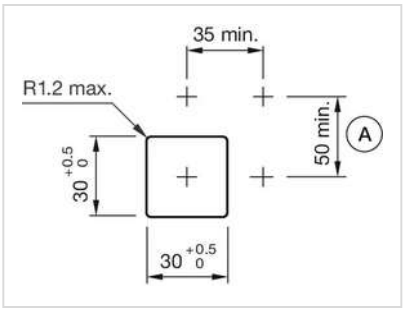

A = Screw terminal

Dimension drawings:

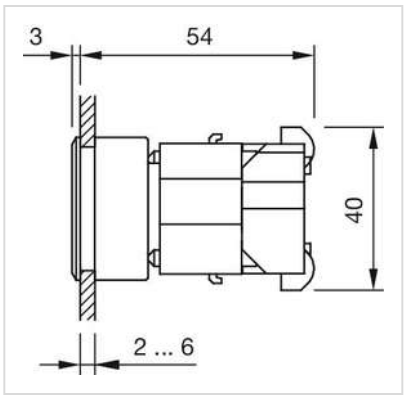

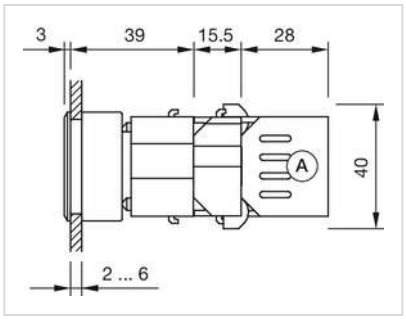

A = Screw terminal