PK5522

Pressure switch with intuitive switch point setting

PK-100-SFG14-PSPKG/US/ /W

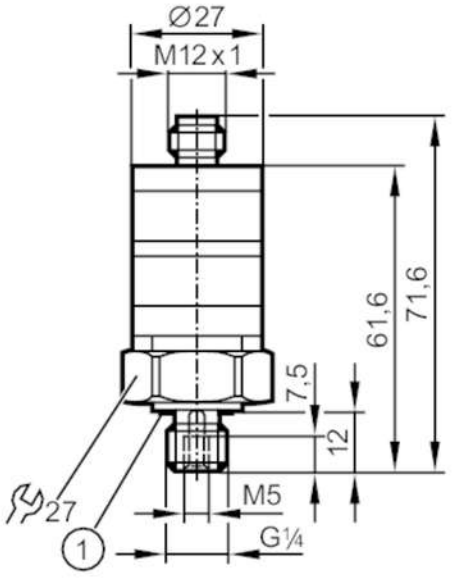

1 Sealing

Product characteristics			
Number of inputs and outputs		Number of digital outputs: 1	
Measuring range		0...100 bar	0...1450 psi
Process connection		threaded connection G 1/4 external thread internal thread:M5	
Application			
Application		for industrial applications	
Media		liquids and gases	
Medium temperature	[°C]	-25...80	
Min. bursting pressure		1000 bar	14500 psi
Pressure rating		200 bar	2900 psi
Type of pressure		relative pressure	
Electrical data			
Operating voltage	[V]	9.6...32 DC	
Current consumption	[mA]	< 25	
Min. insulation resistance	[MΩ]	100; (500 V DC)	
Protection class		III	
Reverse polarity protection		yes	
Inputs / outputs			
Number of inputs and outputs		Number of digital outputs: 1	
Outputs			
Total number of outputs		1	
Output signal		switching signal	
Electrical design		PNP	
Number of digital outputs		1	
Output function		normally open	

PK5522

Pressure switch with intuitive switch point setting

PK-100-SFG14-PSPKG/US/ /W

Max. voltage drop switching output DC	[V]	2	
Permanent current rating of switching output DC	[mA]	500	
Switching frequency DC	[Hz]	100	
Short-circuit protection		yes	
Type of short-circuit protection		pulsed	
Overload protection		yes	
Measuring/setting range			
Measuring range		0...100 bar	0...1450 psi
Set point SP		3...100 bar	44...1450 psi
Hysteresis		2 bar	29 psi
Accuracy / deviations			
Switch point accuracy [% of the final value]		< ± 2,5; (Setting accuracy)	
Repeatability [% of the final value]		< ± 0,5; (with temperature fluctuations < 10 K)	
Characteristics deviation [% of the final value]		< ± 1,5 (BFSL) / < ± 2,5 (LS); (BFSL = Best Fit Straight Line; LS = limit value setting)	
Temperature drift per 10 K		< ± 0.5	
Software / programming			
Adjustment of the switch point		setting ring	
Operating conditions			
Ambient temperature	[°C]	-25...80	
Storage temperature	[°C]	-40...100	
Protection		IP 67	
Tests / approvals			
EMC		DIN EN 61000-6-2	
		DIN EN 61000-6-3	
Shock resistance		DIN IEC 68-2-27	50 g (11 ms)
Vibration resistance		DIN IEC 68-2-6	20 g (10...2000 Hz)
MTTF	[years]	1030	
Pressure Equipment Directive		Sound engineering practice; can be used for group 2 fluids; group 1 fluids on request	
Mechanical data			
Weight	[g]	93.5	
Materials		PBT; PC; FKM; stainless steel (1.4404 / 316L)	
Materials (wetted parts)		stainless steel (1.4404 / 316L); FKM	
Min. pressure cycles		50 million	
Tightening torque	[Nm]	25	
Process connection		threaded connection G 1/4 external thread internal thread:M5	
Restrictor element integrated		no (can be retrofitted)	
Displays / operating elements			
Display		operation	LED, green
		switching status	LED, yellow

PK5522

Pressure switch with intuitive switch point setting

PK-100-SFG14-PSPKG/US/ /W

With scale	yes

Remarks

Pack quantity	1 pcs.

Electrical connection

Connector: 1 x M12; coding: A



Connection

