E11507

Wirable plug

SSTAH050MSSFKPG

phase-out article

Alternative articles: EVC817
When selecting an alternative article and accessories please note that technical data may differ!

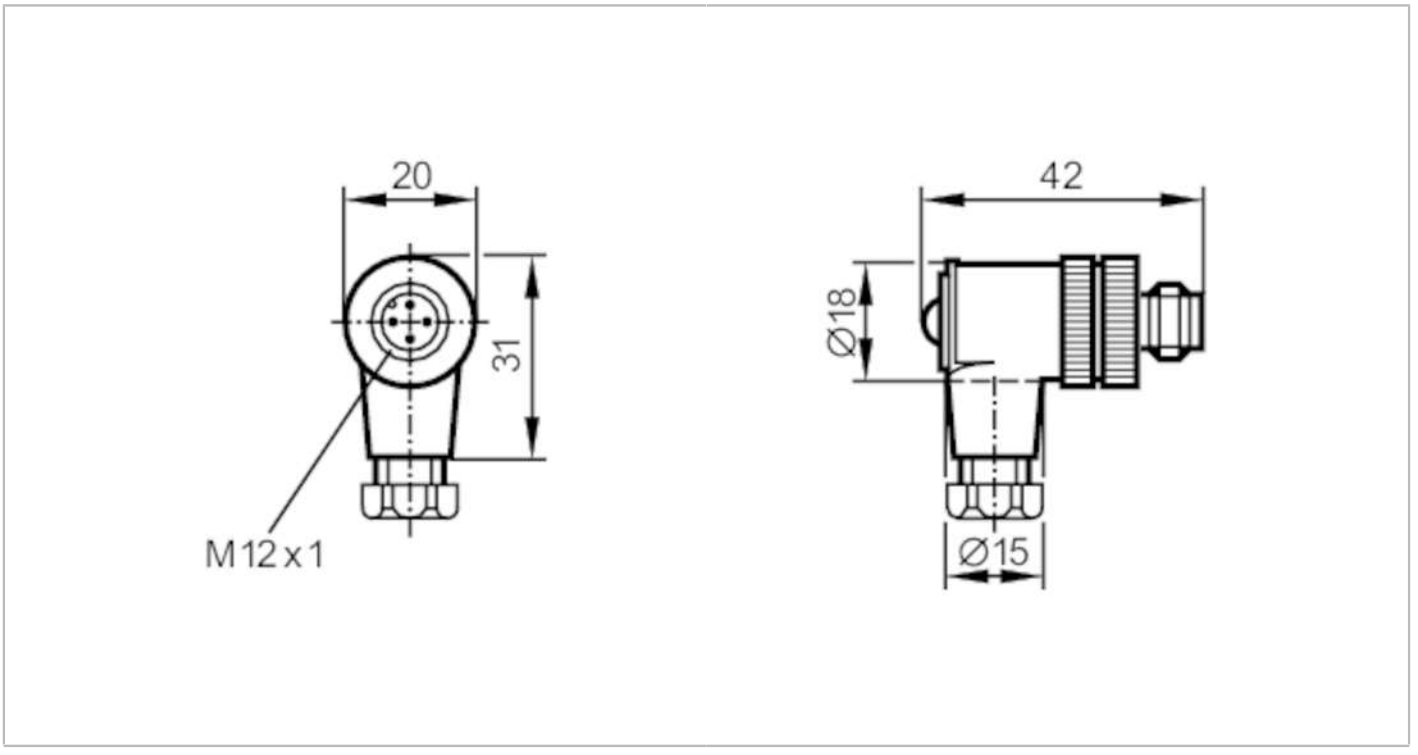

Application		
Special feature		Free from silicone; Gold-plated contacts
Free from silicone		yes
Electrical data		
Operating voltage	[V]	< 45 AC / < 70 DC
Max. current load total	[A]	4; (...40 °C)
Operating conditions		
Ambient temperature	[°C]	-25...85
Protection		IP 68
Mechanical data		
Weight	[g]	26.5
Materials		PA
Moulded-body material		PA
Material nut		brass, nickel-plated
Remarks		
Pack quantity		1 pcs.

E11507

Wirable plug

SSTAH050MSSFKPG

Electrical connection

screw terminals: ...0.75 mm²; Cable sheath: Ø 4...6 mm

Electrical connection - plug

Connector: 1 x M12, angled; coding: A; Moulded body: PA; Locking: brass, nickel-plated; Contacts: gold-plated

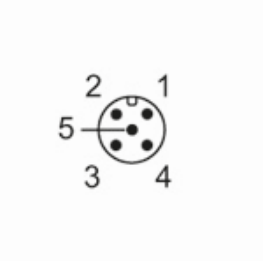

Connection

