PRODUCT DETAILS

**ARTICLE: 4024**

## WHEEL P 150X40/50 PLAIN BORE 20



### Wheel series P

Monolitic polyammide 6 wheels available with standard shielded or stainless steel precision ball bearings; standard or stainless steel roller bearing; plain bore.
Plain bore wheel.

### Technical data

| | | |
|---|---|---|
| Wheel diameter | D | 150 mm |
| Tyre width | E | 40,0 mm |
| Bore diameter | d | 20 mm |
| Weight article | | 0,370 kg |
| Hub width | L | 50 mm |
| Load Capacity | | 400 kg |

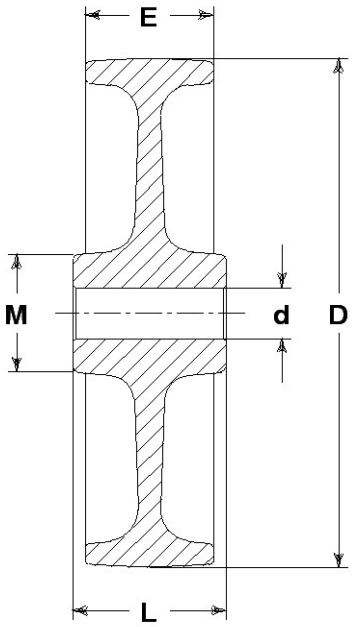


**GENERAL INFORMATION / RECOMMENDATIONS AND WARNINGS**
The cited text and the complete catalogue in their most up-dated versions are available in the OEM's website page www.lagspa.it/downloads. The dimensions, descriptions, specifications and illustrations herein are indicative and subject to variations without notice. The fact that products are illustrated herein does not necessarily imply they are available from stock nor does it place us under any obligation to supply them.
Tests carried out refer to the original products with original accessories: the replacement of one of the components with others of different manufacture might prevent the same results from being achieved and will automatically invalidate any guarantee. Please contact our technical service concerning any special application.