# EVF242

## Connection cable

VDOAF030VAS00,3P03STGH030VAS

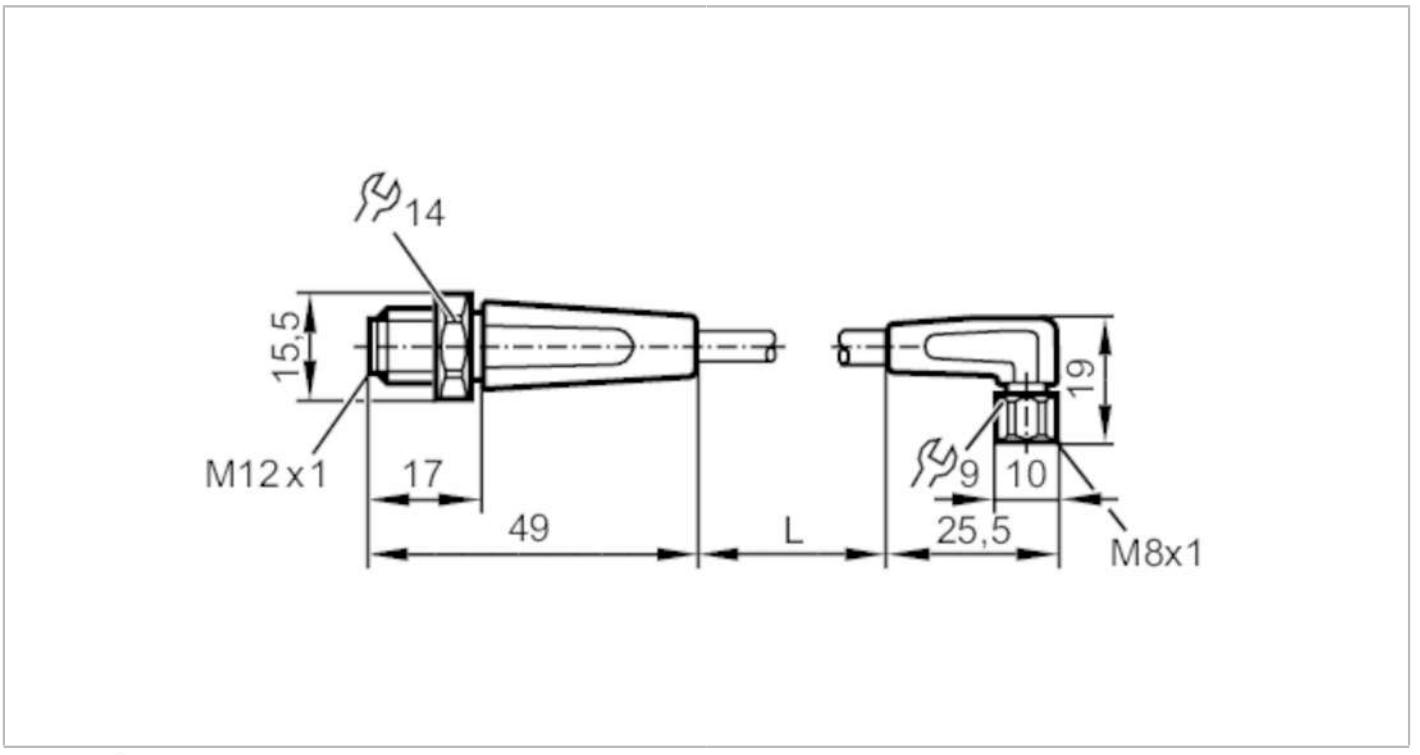


| | | | |
|---|---|---|---|
| **Application** | | | |
| Special feature | | Free from silicone; Halogen-free; Gold-plated contacts; Drag chain suitability | |
| Application | | hygienic and wet areas in the food industry | |
| Free from silicone | | yes | |
| **Electrical data** | | | |
| Operating voltage | [V] | < 50 AC / < 60 DC;  (cULus: 30 AC / 30 DC) | |
| Protection class | | III | |
| Max. current load total | [A] | 3 | |
| **Operating conditions** | | | |
| Ambient temperature | [°C] | -25...80 | |
| Ambient temperature (moving) | [°C] | 5...80 | |
| Protection | | IP 65; IP 67; IP 68; IP 69K | |
| **Tests / approvals** | | | |
| UL approval | | power supply | Class 2 |
| **Mechanical data** | | | |
| Weight | [g] | 31 | |
| Dimensions | [mm] | 15.5 x 15.5 x 49 | |
| Materials | | housing: PP Halogen-free; Sealing: EPDM | |
| Material nut | | stainless steel (1.4404 / 316L) | |
| Drag chain suitability | | yes | |

# EVF242

## Connection cable

VDOAF030VAS00,3P03STGH030VAS

| | | |
|---|---|---|
| Drag chain suitability | bending radius for flexible use | min. 10 x cable diameter |
| | travel speed | max. 3.3 m/s for a horizontal travel length of 5 m and max. acceleration of 5 m/s² |
| | bending cycles | > 1 Mio. |
| | torsional strain | ± 180 °/m |

### Remarks

| | |
|---|---|
| Pack quantity | 1 pcs. |

### Electrical connection - plug

Connector: 1 x M12, straight; coding: A; Locking: stainless steel (1.4404 / 316L); Contacts: gold-plated; Tightening torque: 0.6...1.5 Nm

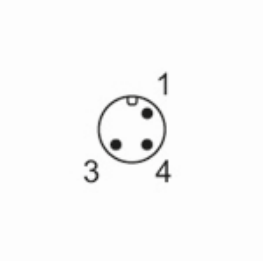


### Electrical connection

Cable: 0.3 m, MPPE, Halogen-free, grey, Ø 4.9 mm; 3 x 0.34 mm² (42 x Ø 0.1 mm )

Connection

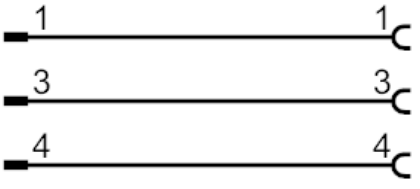


### Electrical connection - socket

Connector: 1 x M8, angled; coding: A; Locking: stainless steel (1.4404 / 316L); Contacts: gold-plated; Tightening torque: 0.3...0.5 Nm

