Start search Help

PINET Industrie

Type 02

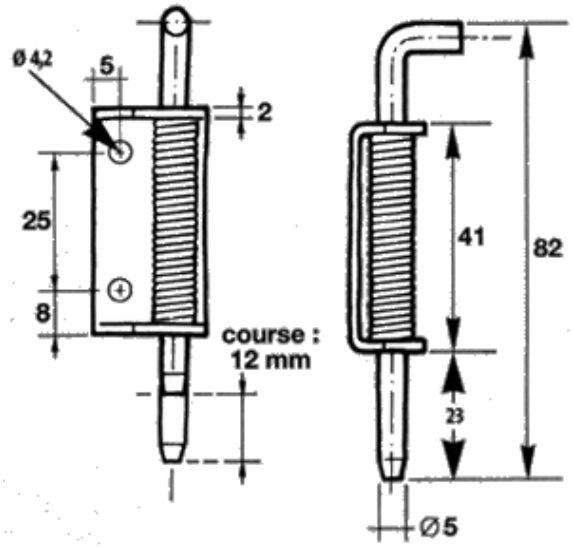

LH

Order_code	A	B	C	Ø	material	finish	poids
							g
12-1-3860	41	21	14	5	acier	zingué	38,5
12-1-3861	41	21	14	5	acier	zingué	38,5
12-1-3862	41	21	14	5	inox 304	brut	38,5
12-1-3863	41	21	14	5	inox 304	brut	38,5

Spring in 304 stainless steel.