DIGITAST
Microminiature SPDT, Key Switches



Features/Benefits

- *High reliability/long life*
- *Designed for low level switching*
- *Ready to implement on PCB*
- *Latching function available*
- *Several button options*
- *RoHS compliant and compatible*

Typical Applications

- *Medical*
- *Instrumentation*
- *Industrial electronics*
- *Audio electronics*

Construction

FUNCTION: momentary or push-push
CONTACT ARRANGEMENT: 1 change over contact SPDT, NO
MODE OF SWITCHING: Non-shorting
DISTANCE BETWEEN BUTTON CENTERS:
HORIZONTAL MINIMUM: 12,7 (0.500) or 17,78 (0.700)
VERTICAL MINIMUM: 17,78 (0.700)
TERMINALS: PC pins
MOUNTING: Soldering, centering pins

Mechanical

TOTAL TRAVEL: ≤ 3 (.0018)
SWITCHING TRAVEL: 1,5 (0.0591)
LATCHING TRAVEL: 1,8 (0.0709)
OPERATING FORCE: 1.5 +/- 0.5 N (150 +/- 50 grams)

Process

SOLDERABILITY:
Wave soldering, compatible with lead free soldering profile
Hand soldering, 350°C for 3 seconds

Electrical

SWITCHING POWER MAX.: 240 mW DC
SWITCHING VOLTAGE MAX.: 24 V DC
SWITCHING CURRENT MAX.: 10 mA DC
CARRYING CURRENT AT 20°C (push-push version): 100 mA
DIELECTRIC STRENGTH (50 Hz, 1 min): 500 V
OPERATING LIFE with or without max. switching power
Momentary: ≥ 5 x 10^6 operations
Push-push: ≥ 5 x 10^5 operations
CONTACT RESISTANCE: Initial ≤ 50 mΩ
After 5 x 10^6 operations: ≤ 100 mΩ
INSULATION RESISTANCE: ≥ 10^{10} Ω
CAPACITANCE at f= 10 kHz: ≤ 0.8pF
BOUNCE TIME: ≤ 2.5 ms
Operating speed 400 mm/s (15.75/s)

Environmental

OPERATING TEMPERATURE: -25°C to 85°C.

How To Order

Our easy build-a-switch concept allows you to mix and match options to create the switch you need. To order, select desired option from each category and place it in the appropriate box. **Some of the configurations may not be available or could require some development.**

Switch

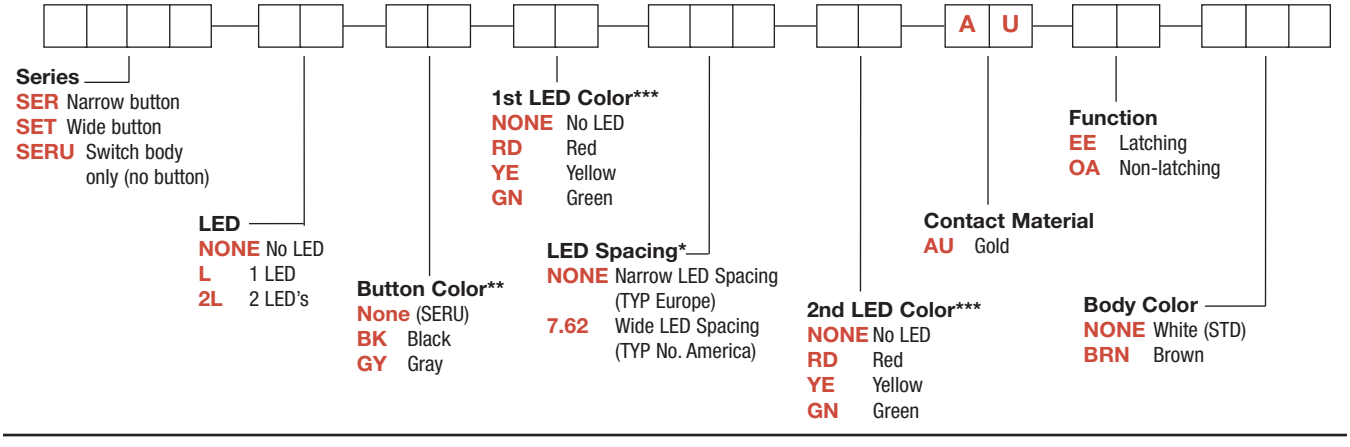

Button

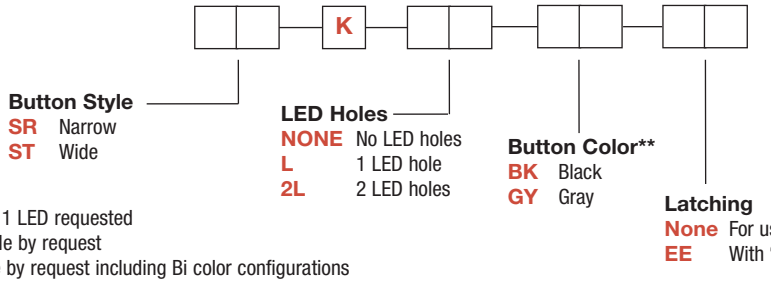

* LED spacing only applies when 1 LED requested
** Additional button colors available by request
*** Additional LED colors available by request including Bi color configurations

DESIGNATION

SER NARROW BUTTON

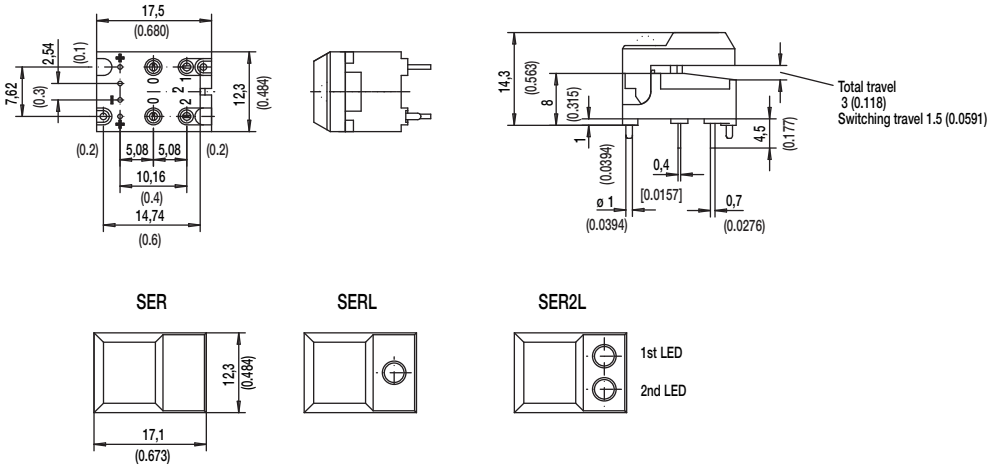



SET WIDE BUTTON

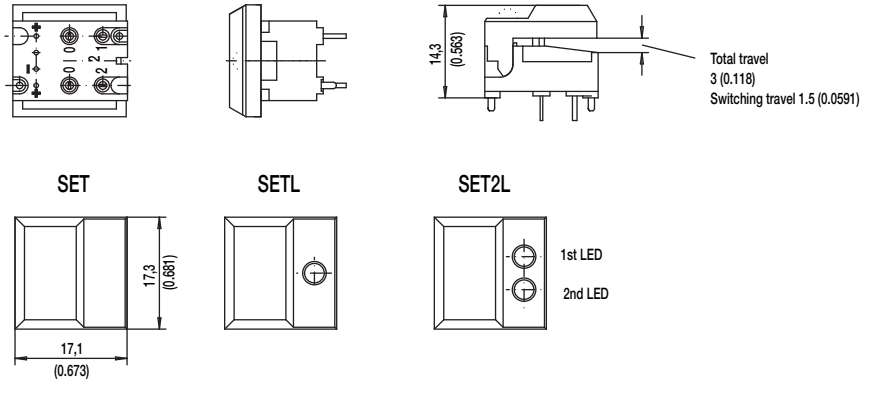



SERU NO BUTTON

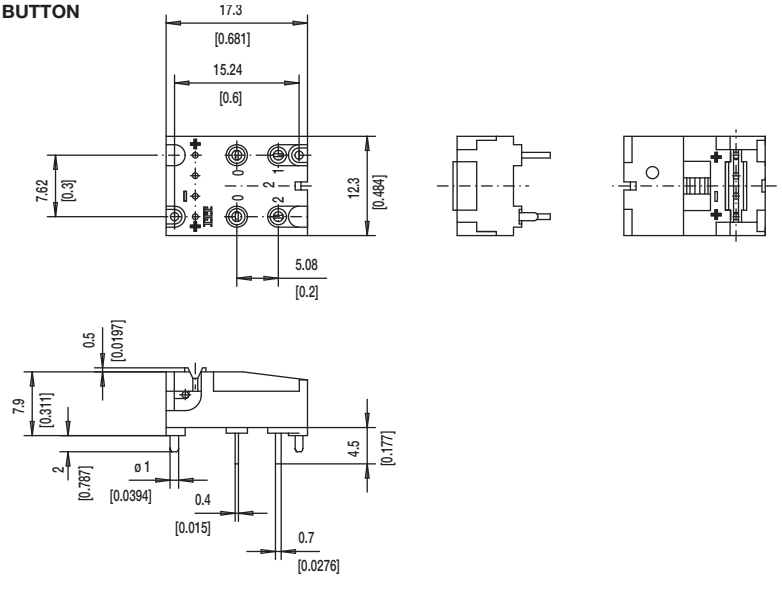



First Angle Projection

Dimensions are shown: mm
Specifications and dimensions subject to change

DIGITAST
Microminiature SPDT, Key Switches

LED

NONE NO LED

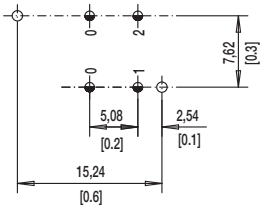

L 1 LEDs

7.62 mm Spacing (TYP No. America)

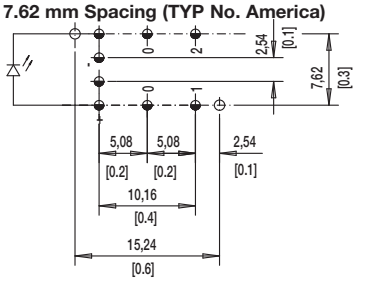

NARROW SPACING (TYP EUROPE)

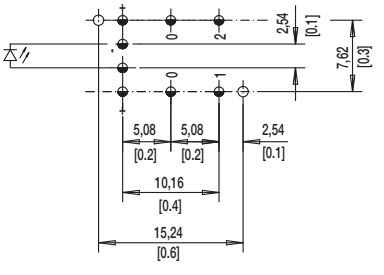

TOP VIEW OF PCB

2L 2 LEDs

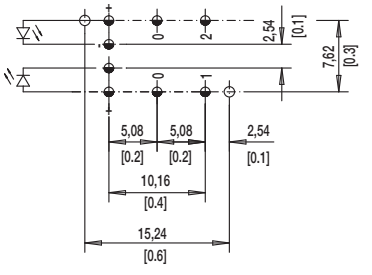

ø 1.0±0.1 (0.0394±0.00349)

ø 1.1±0.05 (0.0433±0.00197)

BUTTON COLOR

BK BLACK

GY GRAY

Other button colors available by request [red (RD), green (GN), white (WH), yellow (YE) , blue (BU) , orange (OG)].

LED COLOR

OPTION CODE	COLOR
NONE	Models without LED
RD	Red
GN	Green
YE	Yellow

CONTACT MATERIAL

OPTION CODE	MATERIAL
AU	Gold

FUNCTION

OPTION CODE	COLOR	SCHEMATIC
OA	Momentary	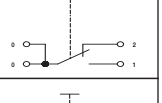
EE	Push-Push	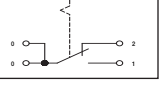

First Angle Projection

Dimensions are shown: mm
Specifications and dimensions subject to change