E40473

Welding adapters EN10357 series A

ADAPT EN10357 DN50

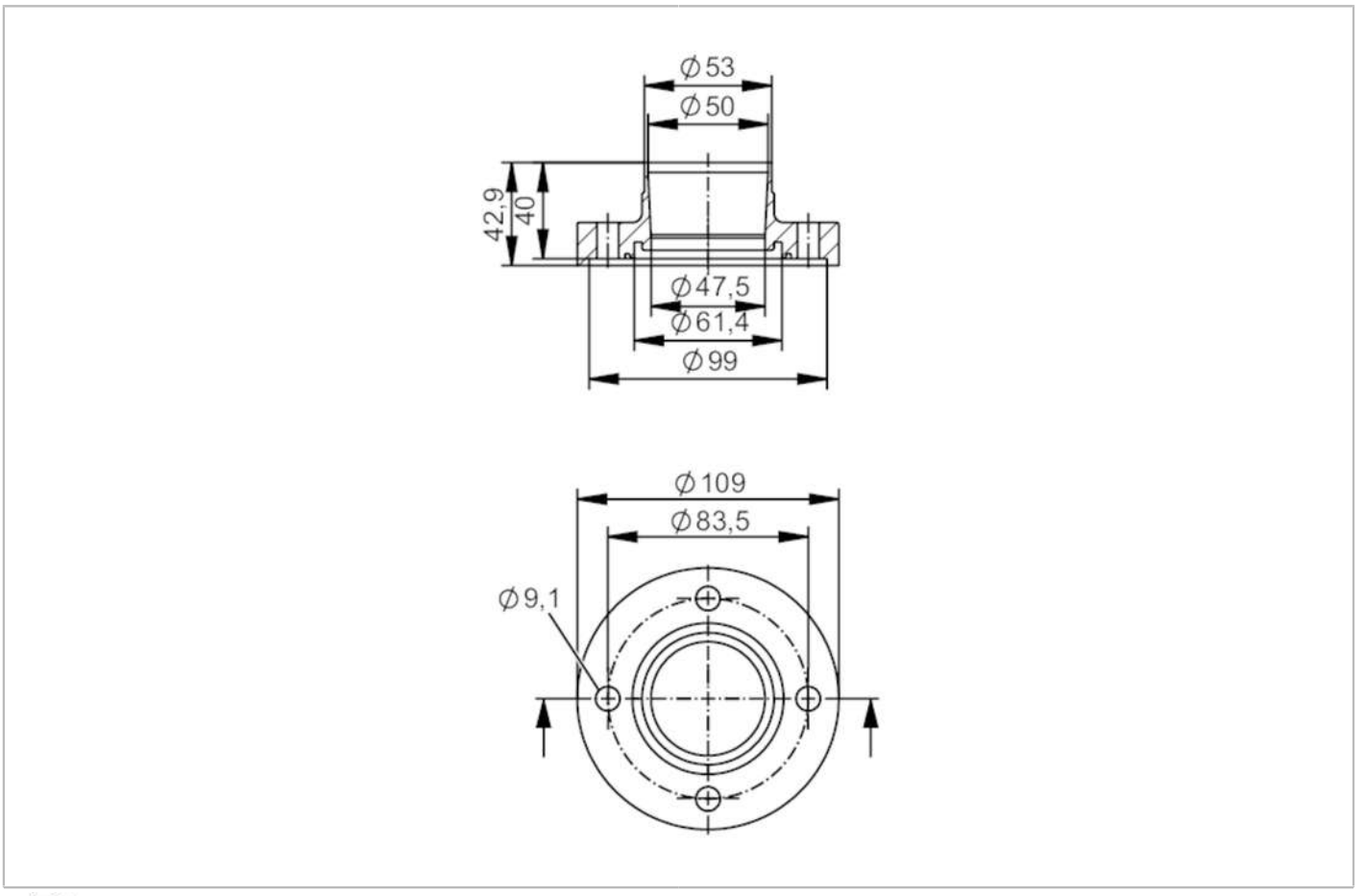

EC 1935/2004 FCM FDA

Application			
Design		for volumetric flow meters SMF	
Application		food and beverage industry; hygienic systems	
Pressure rating		25 bar	2.5 MPa
Tests / approvals			
Pressure Equipment Directive		A possible classification to PED depends on the application and has to be carried out by the user / operator.	
Safety instructions		The compatibility between medium and product material has to be checked in all applications.	
Mechanical data			
Weight	[g]	2567.9	
Materials		stainless steel (316L/1.4404)	
Nominal diameter		DN50 (2“)	
Sensor connection		ifm-specific device flange	
Process connection		welding adapter EN10357 series A (DIN)	
Process connection suitable for pipe standard		(DIN EN 10357 series A); (DIN 11866 series A); (DIN 11850 series 1); (DIN 11850 series 2)	
Surface characteristics Ra/Rz of the wetted parts		Ra ≤ 0.4 µm	

E40473

Welding adapters EN10357 series A

ADAPT EN10357 DN50

Accessories	
Items supplied	screws 8
Remarks	
Pack quantity	2 pcs.