

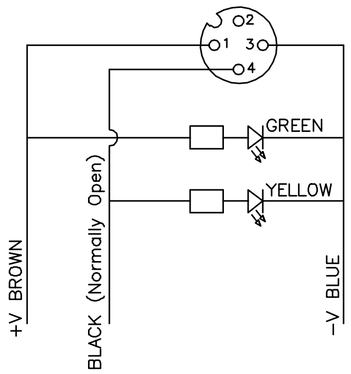

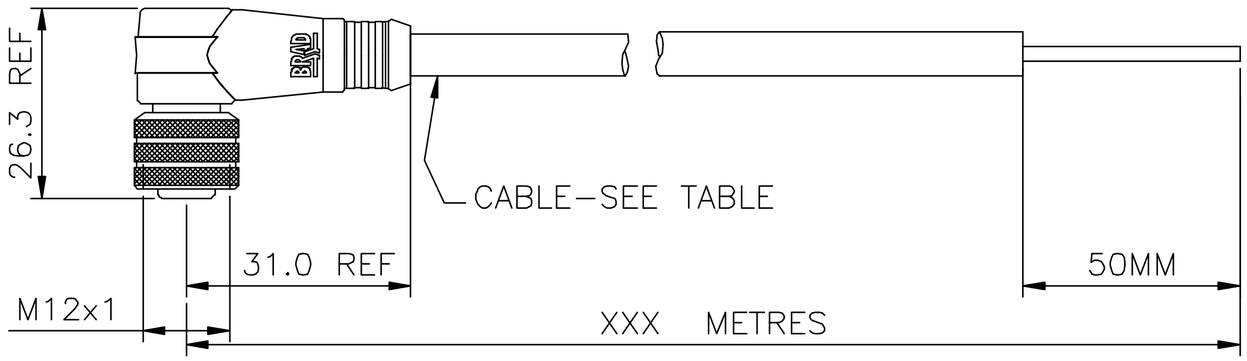

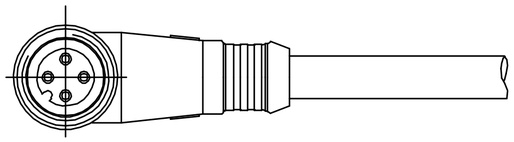

Cable		Coupling Nut Material	Overmould
Exx	PVC	Nickel Plated Brass	PUR
H0x	LSOH PUR	Nickel Plated Brass	PUR
H52	LSOH PUR	Teflon Coated Brass	PUR
I0x	CEI, UNBRAIDED	Nickel Plated Brass	PUR
I2x	CEI, BRAIDED	Teflon Coated Brass	PUR
Lxx	PUR	Nickel Plated Brass	PUR
Mxx	PUR/PVC	Nickel Plated Brass	PUR
Pxx	PUR	Nickel Plated Brass	PUR
P8x	PUR, IRRADIATED	Teflon Coated Brass	PUR
S2x	SJTO TYPE PVC	Teflon Coated Brass	PUR

PART No MATRIX

OPTIONS

8	0	3	0	P	1	X	X	X	M	X	X	X	X

- 8 = 8=Micro Change
- 0 = 0= Portable Change
- 3 = 3=3 Core
- 0P1 = 0P1 = PNP female 90°
- XXX = See table of cable types
- M = M=Metres F=Feet
- XXX = LENGTH 020=2 METRES 050=5 METRES 200=20 METRES
- X = Coupling Nut Material Blank=Standard 1=Stainless Steel 5=Delrin

Specification.

(See alternative variations in matrix key)
Insert Material – PUR (30% Glass Filled)
Contact Material – Brass (CuZn36)
Contact Plating – 2um Ni, 0.70um Gold
Coupling Nuts – See Table
Seal – Viton O–Ring
Protection Class – IP68
Voltage Rating – 10 to 30VDC
Contact Current Rating – 4 Amps
Overmoulding – PUR

ECN	Rev	By	Descriptions	Date	Approved
N/A	1X	GG	First issue	18.02.04	NW

Third Angle Projection

This drawing and its contents are the proprietary and confidential property of Woodhead Industries Inc. and/or its subsidiaries and may not be used or disclosed to others without the express prior written consent of Woodhead Industries Inc. and/or its subsidiaries.

Applicable Standards ASME Y14.5M ISO 1660

	NAME	DATE
Drawn	G.GREEN	10.05.04
Checked	N.WITTS	10.05.04
Approved	N.WITTS	10.05.04

Material: SEE SPECIFICATION
Finish: SEE SPECIFICATION
Dimensions In MM
0.0 ± 0.25mm
0.00 ± 0.10mm
0.000 ± 0.025mm
Angles ± 1°

Part No. 8030P1XXXMXXX
Size A4
Description: MICRO CHANGE 80 SERIES M12 PNP FE 90°(3 WIRE)
Drawing No. 8030P1XXXMXXX
Rev A
Scale NTS
SHEET 1 OF 1

Template #: WT