X20DC1073

1 General information

The module is equipped with a SinCos encoder interface. The input signals are monitored. This makes it possible to detect open or shorted lines as well as encoder supply failures.

- SinCos encoder interface
- Encoder input monitoring
- 5 VDC and GND for encoder supply
- NetTime timestamp: Position time
- Can be used with a SafeLOGIC controller

SinCos encoders

SinCos encoders with 1 V_{ss} are mostly used in linear drives and systems with high-resolution optical or magnetic position measurement systems. The module can process input signals with a frequency of up to 400 kHz.

NetTime timestamp for the position

It is not just the position value that is important for highly dynamic positioning tasks, but also the exact time the position is measured. The module is equipped with a NetTime function for this that supplies a timestamp for the recorded position with microsecond accuracy.

The timestamp function is based on synchronized timers. If a timestamp event occurs, the module immediately saves the current NetTime. After the respective data is transferred to the CPU, including this precise moment, the CPU can then evaluate the data using its own NetTime (or system time), if necessary.

1.1 Other applicable documents

For additional and supplementary information, see the following documents.

Other applicable documents

Document name	Title
MAX20	X20 system user's manual
MAEMV	Installation / EMC guide

2 Order data

Order number	Short description	Figure
	Digital signal processing and preparation	
X20DC1073	X20 digital counter module, 1x SinCos, 1 Vss, 400 kHz input frequency, encoder monitoring, NetTime function	
	Required accessories	
	Bus modules	
X20BM11	X20 bus module, 24 VDC keyed, internal I/O power supply connected through	
X20BM15	X20 bus module, with node number switch, 24 VDC keyed, internal I/O power supply connected through	
	Terminal blocks	
X20TB12	X20 terminal block, 12-pin, 24 VDC keyed	

Table 1: X20DC1073 - Order data

3 Technical description

3.1 Technical data

Order number	X20DC1073
Short description	
I/O module	1x SinCos input
General information	
B&R ID code	0xAEC6
Status indicators	Counting direction, operating state, module status
Diagnostics	
Module run/error	Yes, using LED status indicator and software
Counting direction	Yes, using LED status indicator
Power consumption	
Bus	0.01 W
Internal I/O	1.3 W
Additional power dissipation caused by actuators (resistive) [W]	-
Type of signal lines	Shielded lines must be used for all signal lines.
Certifications	
CE	Yes
ATEX	Zone 2, II 3G Ex nA nC IIA T5 Gc IP20, Ta (see X20 user's manual) FTZÚ 09 ATEX 0083X
UL	cULus E115267 Industrial control equipment
HazLoc	cCSAus 244665 Process control equipment for hazardous locations Class I, Division 2, Groups ABCD, T5
EAC	Yes
KC	Yes
Encoder inputs	
Type	SinCos
Angular position resolution	13-bit, with a signal of 1 V_{SS}
Encoder monitoring	Yes
Max. encoder cable length	Max. 20 m, see "Calculating the maximum encoder cable length".
Sine/Cosine inputs	
Signal transmission	Differential signals, symmetrical
Signal frequency	DC up to 400 kHz
Differential voltage	1 V_{SS}
Common-mode voltage	Max. ±10 V
Terminating resistor	120 Ω
Encoder power supply	
Output voltage	5 V
Min. output voltage at 300 mA	4.86 V
Load capacity	300 mA
Protective measures	
Overload-proof	Yes
Short-circuit proof	Yes
Electrical properties	
Electrical isolation	Channel isolated from bus Channel not isolated from channel
Operating conditions	
Mounting orientation	
Horizontal	Yes
Vertical	Yes
Installation elevation above sea level	
0 to 2000 m	No limitation
>2000 m	Reduction of ambient temperature by 0.5°C per 100 m
Degree of protection per EN 60529	IP20
Ambient conditions	
Temperature	
Operation	
Horizontal mounting orientation	-25 to 60°C
Vertical mounting orientation	-25 to 50°C
Derating	See section "Derating".
Storage	-40 to 85°C
Transport	-40 to 85°C

Table 2: X20DC1073 - Technical data

Order number	X20DC1073
Relative humidity	
Operation	5 to 95%, non-condensing
Storage	5 to 95%, non-condensing
Transport	5 to 95%, non-condensing
Mechanical properties	
Note	Order 1x terminal block X20TB12 separately. Order 1x bus module X20BM11 separately.
Pitch	12.5$^{+0.2}$ mm

Table 2: X20DC1073 - Technical data

3.2 LED status indicators

For a description of the various operating modes, see section "Additional information - Diagnostic LEDs" in the X20 system user's manual.

Figure	LED	Color	Status	Description
	r	Green	Off	No power to module
			Single flash	RESET mode
			Double flash	BOOT mode (during firmware update)[1)]
			Blinking	PREOPERATIONAL mode
			On	RUN mode
	e	Red	Off	No power to module or everything OK
			On	Error or reset state. Possible cause: • Encoder supply error
			Single flash	I/O error. Possible cause: • Sine/Cosine relative position error (open line)
			Single flash, inverted	Error or reset state and I/O error
	UP	Green	On	The "UP/DN" LEDs are lit depending on the rotational direction and the speed of the connected encoder. The "UP" LED indicates when the encoder position changes in the positive direction.
	DN	Green	On	The "DN" LED indicates when the encoder position changes in the negative direction.

1) Depending on the configuration, a firmware update can take up to several minutes.

3.3 Pinout

Shielded cables must be used for all signal lines.

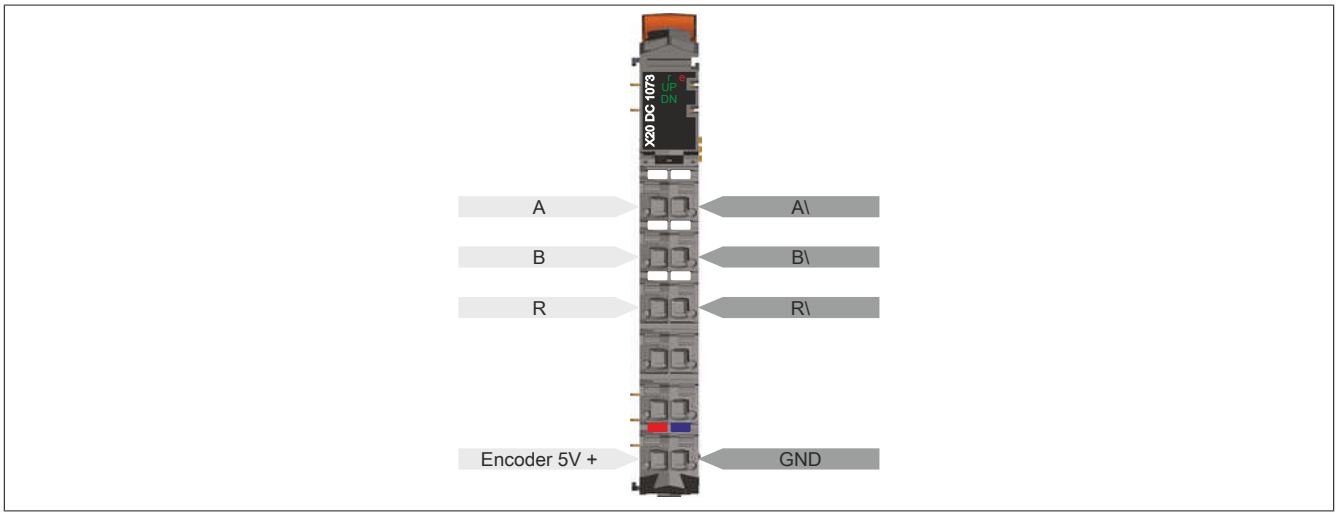

3.4 Connection example

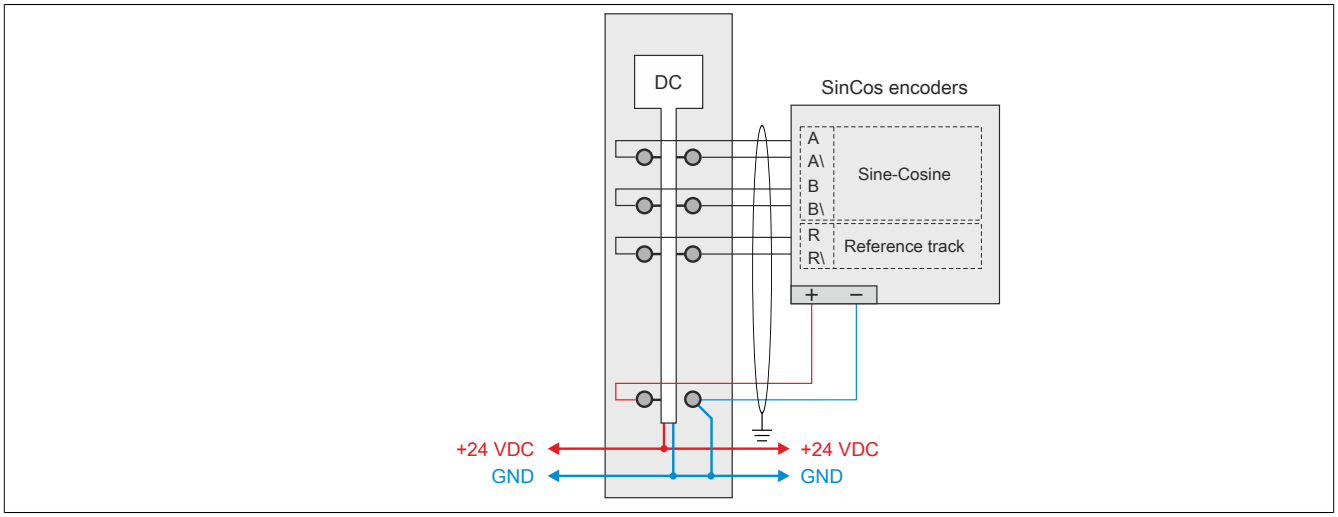

3.5 Analog inputs - Input circuit diagram

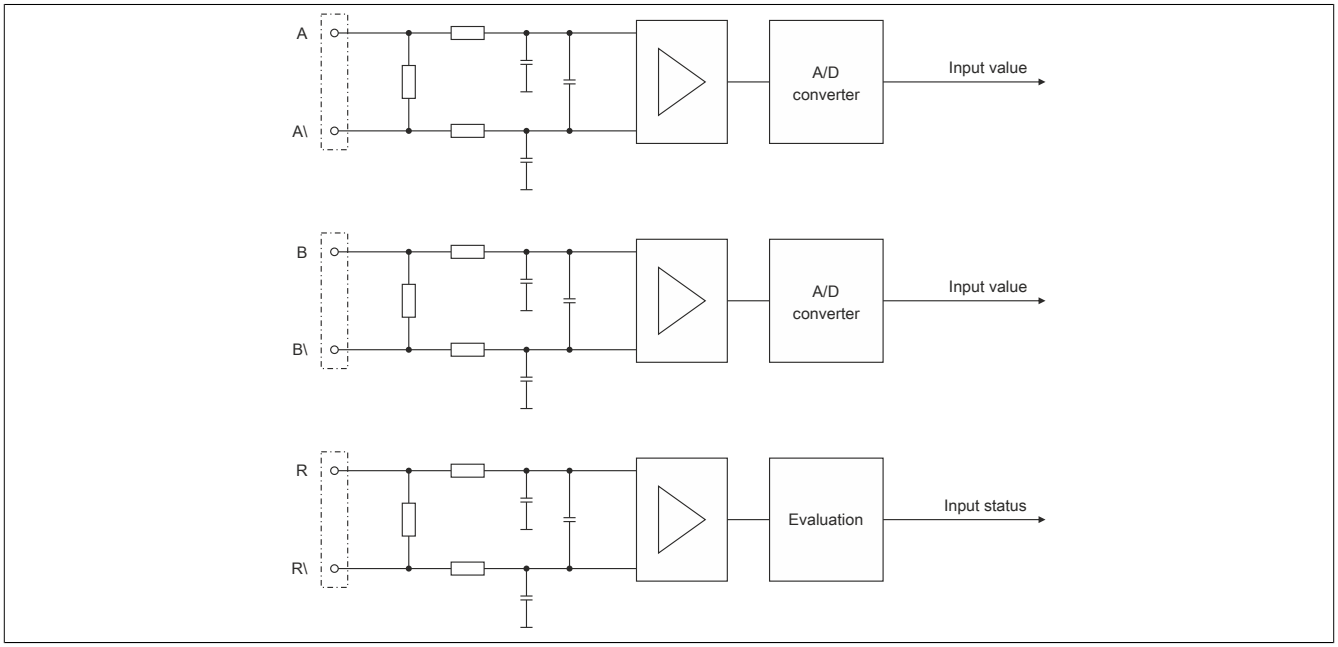

3.6 Circuit diagram for the encoder supply and LEDs

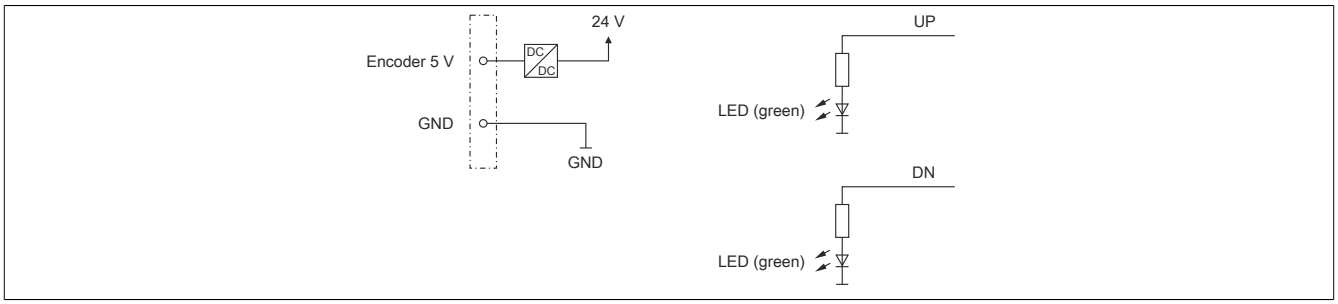

3.7 Calculating the maximum encoder cable length

The following encoder data is assumed for this sample calculation:

Encoder data	
Input voltage	4.75 V – 5.25 V
Max. input current	0.12 A
Module encoder output	
Min. output voltage at 300 mA	4.86 V

Calculation of the maximum voltage drop for the cable

The maximum permitted voltage drop is calculated using the minimum encoder output voltage for the module ($U_{ModuleMin}$) and the minimum encoder input voltage ($U_{EncoderMin}$) of the encoder being used.

$$U_{CableMax} = (U_{ModuleMin} – U_{EncoderMin}) / 2$$

Example: $U_{CableMax} = (4.86\ V – 4.75\ V) / 2 = 0.055\ V$

Calculation of the maximum cable length

$$\text{Cable length}_{Max} = U_{CableMax} * \text{Wire cross section (mm}^2\text{)} / (0.01786 * I_{Encoder})$$

This means:

$I_{Encoder}$ Current consumption of encoder in amps

$U_{CableMax}$ Maximum permitted voltage drop in volts

Example with resolver cable "8BCR0xxxx.1111A-0"

Encoder with 120 mA max. current consumption

Resolver cable cross section = 0.25 mm²

Results in a total cable length of:

$$\text{Cable length}_{Max} = 0.055\ V * 0.25\ mm^2 / 0.01786 * 0.12\ A) = 6.41\ m$$

3.8 Derating

There is no derating when operated below 55°C.

During operation over 55°C, the power dissipation of the modules to the left and right of this module is not permitted to exceed 1.15 W!

For an example of calculating the power dissipation of I/O modules, see section "Mechanical and electrical configuration - Power dissipation of I/O modules" in the X20 user's manual.

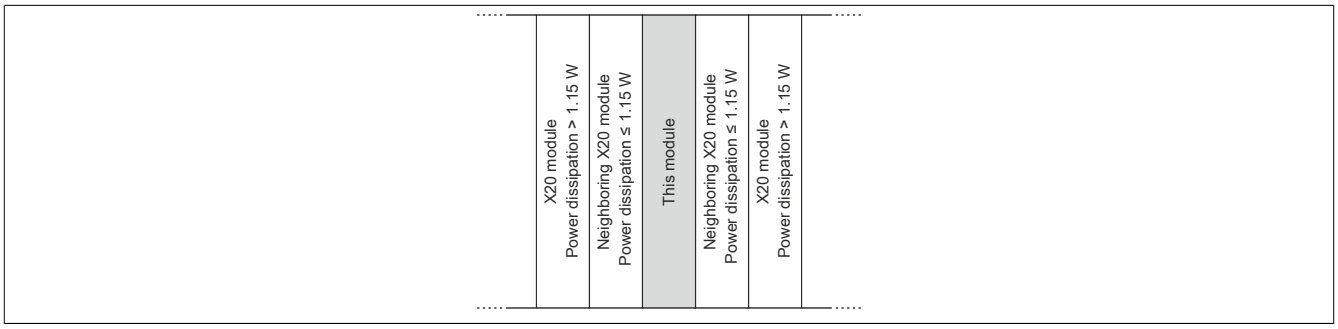

4 Register description

4.1 General data points

In addition to the registers described in the register description, the module has additional general data points. These are not module-specific but contain general information such as serial number and hardware variant.

General data points are described in section "Additional information - General data points" in the X20 system user's manual.

4.2 Function model 0 - default

Register	Name	Data type	Read		Write	
			Cyclic	Acyclic	Cyclic	Acyclic
Module configuration						
513	CfO_SIframeGenID	USINT				•
Basic functions						
683	SDCLifeCount	SINT	•			
1172	PositionHW	UDINT	•			
1180	PositionLW	UDINT	•			
	Position	DINT				
1164	PosTime	DINT	•			
1166	PosTime	INT	•			
1155	PosCycle	SINT	•			
Error management						
389	ErrorEnableID_1710	USINT				•
261	ErrorStateID_1710	USINT	•			
	EncoderSupplyError	Bit 0				
	VssCheckError	Bit 2				
325	ErrorQuitID_1710	USINT			•	
	AckEncoderSupplyError	Bit 0				
	AckVssCheckError	Bit 2				
Sin/Cos - Analog interface configuration						
1025	SinCosEnable	USINT				•
1027	SinCosRefSource	USINT				•
1034	SinCosVssMin	UINT				•
1038	SinCosVssMax	UINT				•
1044	SinCosQuitTime	UDINT				•
Additional encoder position						
1029	SinCosCompMode	USINT				•
1204	ReferenceHW	UDINT	•			
1212	ReferenceLW	UDINT	•			
	Reference	DINT				
1187	RefCycle	SINT	•			

SafeLOGIC registers

This module contains additional registers that allow the module to be used with a SafeLOGIC controller.

Register	Name	Data type	Read		Write	
			Cyclic	Acyclic	Cyclic	Acyclic
Configuration						
7170	CfO_DTS_SourceRef	INT				•
7173	CfO_DTS_CycleSelect	USINT				•
Communication						
7188	Position	DINT	•			
7196	PosTime	DINT	•			
7202	DTS_SourceRef	INT	•			
7206	DTS_CheckSum	INT	•			

4.3 Function model 254 - Bus controller

Register	Object[1)]	Name	Data type	Read		Write	
				Cyclic	Acyclic	Cyclic	Acyclic
Module configuration							
513	-	CfO_SIframeGenID	USINT				•
Basic functions							
1180	0	Position	DINT	•			
1155	4	PosCycle	SINT	•			
Error management							
389	-	ErrorEnableID_1710	USINT				•
325	15	ErrorStateID_1710	USINT	•			
		EncoderSupplyError	Bit 0				
		VssCheckError	Bit 2				
261	6	ErrorQuitID_1710	USINT			•	
		AckEncoderSupplyError	Bit 0				
		AckVssCheckError	Bit 2				
Sin/Cos - Analog interface configuration							
1025	-	SinCosEnable	USINT				•
1027	-	SinCosRefSource	USINT				•
1034	-	SinCosVssMin	UINT				•
1038	-	SinCosVssMax	UINT				•
1044	-	SinCosQuitTime	UDINT				•
Additional encoder position							
1029	-	SinCosCompMode	USINT				•
1212	8	Reference	DINT	•			
1187	12	RefCycle	SINT	•			

1) The offset specifies the position of the register within the CAN object.

4.3.1 Using the module on the bus controller

Function model 254 "Bus controller" is used by default only by non-configurable bus controllers. All other bus controllers can use other registers and functions depending on the fieldbus used.

For detailed information, see section "Additional information - Using I/O modules on the bus controller" in the X20 user's manual (version 3.50 or later).

4.3.2 CAN I/O bus controller

The module occupies 1 analog logical slot on CAN I/O.

4.4 Module configuration

The following configuration register can be used to configure different module settings. They can be used, for example, to modify the module's behavior on an X2X Link network. One configuration register is available for the user.

4.4.1 Data query

Name:
CfO_SIframeGenID

This register can be used to define when the synchronous/cyclic input data is generated. "X2X cycle optimized" should be set for jitter-free data acquisition. "Fast reaction" can be set for the best performance.

Data type	Value	Information
USINT	9	Fast reaction
	14	X2X cycle optimized; Bus controller default

4.5 Basic functions

This module can import the position of a motor shaft when used together with a sin/cos encoder. The received position data is prepared in 2 different formats and given a timestamp. 5 registers are available for further processing. This allows the user to choose which format is best suited for individual application.

4.5.1 SDC counter register

Name:
SDCLifeCount

The 8-bit counter register is needed for the SDC software package. It is incremented with the system clock to allow the SDC to check the validity of the data frame.

Data type	Values
SINT	-128 to 127

4.5.2 Absolute position values

Name:
PositionHW
PositionLW

The absolute position of the encoder is defined using 64-bit resolution. The position value is stored in the PositionHW and PositionLW registers. The upper 32 bits are stored the PositionHW register, while the lower 32 bits are stored in the PositionLW register.

For SinCos signal evaluation, see "Format of the SinCos signal" on page 10 for information regarding the data format.

Data type	Value
2x UDINT	0 to 4,294,967,295

4.5.3 SDC position value

Name:
Position

The SDC library requires a signed 32-bit position value. The position's low word can be accessed separately for this. The value can also be used as default position value, however.

For SinCos signal evaluation, see "Format of the SinCos signal" on page 10 for information regarding the data format.

Data type	Value
DINT	-2,147,483,648 to 2,147,483,647

4.5.4 NetTime of the position values

Name:
PosTime

The current NetTime value is assigned to each determined position in this register. The NetTime is recorded with µs accuracy.
The SDC library requires a 16 bit value. The NetTime value is therefore also prepared in this format.

For more information about NetTime and timestamps, see "NetTime Technology" on page 15.

Data type	Value	Information
DINT	-2,147,483,648 to 2,147,483,647	NetTime in µs
INT	-32,768 to 32,767	

4.5.5 Counter for position values

Name:
PosCycle

PosCycle is an integer counter that is incremented as soon as the module has saved a new valid position value.

Data type	Value
SINT	-128 to 127

4.6 Error management

Module-based diagnostics

This module can detect errors on its own and differentiates between 2 different types of error.

- **Encoder supply:**
  The encoder voltage supply is below the permitted limit.
- **V_{ss} Sin/Cos:**
  The voltage value for the Sin/Cos track violates the configured limit values.
  → See register "SinCosVssMin" on page 11 or "SinCosVssMax" on page 11

4.6.1 Enabling/disabling error messages

Name:
ErrorEnableID_1710
The individual diagnostics can be separately enabled or disabled in this register.

Data type	Values	Bus controller default setting
USINT	See bit structure.	255

Bit structure

Bit	Name	Value	Information
0	Error detection - Encoder supply	0	Disabled
		1	Enabled (bus controller default setting)
1	Reserved	-	
2	Error detection - V_{ss} Sin/Cos	0	Disabled
		1	Enabled (bus controller default setting)
3 - 7	Reserved	-	

4.6.2 Show error messages

Name:
ErrorStateID_1710

EncoderSupplyError
VssCheckError

This register indicates which error or warning is currently active. For the meaning of individual error messages, see "Error management" on page 9.

Data type	Values
USINT	See the bit structure.

Bit structure

Bit	Name	Value	Information
0	EncoderSupplyError	0	No error
		1	Encoder supply error
1	Reserved	-	
2	VssCheckError	0	No error
		1	V_{ss} error on the Sin/Cos track
3 - 7	Reserved	-	

4.6.3 Acknowledge error messages

Name:
ErrorQuitID_1710

AckEncoderSupplyError
AckVssCheckError

This register is used to acknowledge an error message that occurred in the "Show error messages" on page 9 register. For the meaning of individual error messages, see "Error management" on page 9.

Data type	Values
USINT	See the bit structure.

Bit structure

Bit	Name	Value	Information
0	AckEncoderSupplyError	0	No error acknowledgment
		1	Error acknowledgment
1	Reserved	-	
2	AckVssCheckError	0	No error acknowledgment
		1	Error acknowledgment
3 - 7	Reserved	-	

4.7 Sin/Cos - Analog interface configuration

The module is equipped with an analog interface for detecting a differential sine-, cosine- and reference signal.

4.7.1 Format of the SinCos signal

The SinCos signal is represented as a position value in the "Absolute position values" on page 8 and "SDC position value" on page 8 registers. The following relationships apply:

- PositionLW and Position are identical in the function.
- PositionHW extends the integer range of PositionLW by adding multi-turn functionality.

64-bit register	PositionHW (unsigned)	PositionLW (unsigned)	
32-bit register	-	Position (signed)	
Format	Integer extension (to 48-bit)	Integer (16-bit)	Decimal places: (with 13-bit resolution)
Information		A full sine wave corresponds to an increment of the integer.	15 14 13 12 11 10 9 8 7 6 5 4 3 2 1 0 x x x x x x x x x x x x x 0 0 0 **Important:** The lower 3 bits always contain the value 0.
Word/DWord	DWord	Word 1	Word 0

Relationship between sine curve (red) and decimal places:

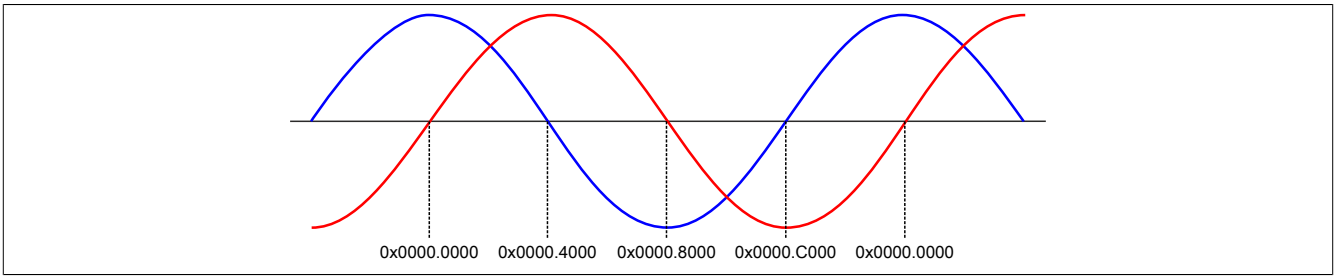

4.7.2 Enabling SinCos

Name:
SinCosEnable

This register must always have the value 1 for configuration reasons.

Data type	Value	Information
USINT	1	Bus controller default: 1

4.7.3 Enabling SinCos reference source

Name:
SinCosRefSource

This register must always have the value 0 for configuration reasons.

Data type	Value	Information
USINT	0	Bus controller default setting: 0

4.7.4 Configuring the lower Vss value

Name:
SinCosVssMin

This register specifies the lower limit value for the peak-to-peak voltage of the sine/cosine track. The incoming signal is monitored in this way. If the incoming value falls below this specified limit, then the module reports the corresponding error.

Data type	Value	Information
UINT	0 to 1500	Values in mV Bus controller default: 800

4.7.5 Configuring the upper Vss value

Name:
SinCosVssMax

This register specifies the upper limit value for the peak-to-peak voltage of the sine/cosine track. The incoming signal is monitored in this way. If the incoming value exceeds this specified limit, then the module reports the corresponding error.

Data type	Value	Information
UINT	0 to 1500	Values in mV Bus controller default: 1200

4.7.6 Configuring the delay time after errors

Name:
SinCosQuitTime

If an error is detected on the analog interface, the last correctly read values remain valid. An interval can be defined in this register at which the module begins receiving correct values again after the error state without processing them further internally. Only then will newly sampled correct analog values be recognized as valid.

Data type	Value	Information
UDINT	0 to 20000000	Values in µs Bus controller default: 100000

4.8 Additional encoder position

In addition to the basic function, importing position values, the module can also copy an imported position to the reference register. The copy procedure is triggered by a configurable event.

4.8.1 Configuration

The position of the axis being measured is determined by 3 signals. The Z-signal is triggered exactly once during a single full rotation of the axis, which defines the reference point. The sine and cosine values are offset by 90° and undergo twofold evaluation by the module hardware. During "rough interpolation" the analog sine and cosine values are handled like digital signals. This works in the same way as a conventional ABR module. Fine interpolation takes place simultaneously in another part of the module. This is done using module-specific algorithms.

4.8.2 Configuring the copy procedure

Name:
SinCosCompMode

This register is used to determine when the current position should be copied to the reference register. The register is divided into 2 halves. The upper 4 bits determine which of the signal tracks are relevant for the trigger. The lower 4 bits determine which roughly interpolated states the individual signal tracks must demonstrate in order for the copying procedure to take place.

Data type	Values	Bus controller default setting
USINT	See bit structure.	119

Bit structure:

Bit	Name	Value	Information
0	Latch - Sine track	0	Copy when sine is negative
		1	Copy when sine is positive (bus controller default setting)
1	Latch - Cosine track	0	Copy when cosine is negative
		1	Copy when cosine is positive (bus controller default setting)
2	Latch - Reference track (Z-track)	0	Copy when reference is negative
		1	Copy when reference is positive (bus controller default setting)
3	Reserved	-	
4	Sine track	0	Irrelevant for latch
		1	Relevant for latch (bus controller default setting)
5	Cosine track	0	Irrelevant for latch
		1	Relevant for latch (bus controller default setting)
6	Reference track (Z-track)	0	Irrelevant for latch
		1	Relevant for latch (bus controller default setting)
7	Reserved	-	

Call

The reference registers can be called the same way as the registers for the current position.

4.8.3 Reference position (to 64-bit)

Name:
ReferenceHW
ReferenceLW

This register prepares the value of the encoder position at the time a specific event occurred.

The 64-bit position value is placed in the registers ReferenceHW and ReferenceLW. The upper 32 bits are in the ReferenceHW register and the lower 32 bits in the ReferenceLW register.

Data type	Values
UDINT	0 to 4,294,967,295

4.8.4 Reference position (to 32-bit)

Name:
Reference

Just like the position registers, the lower 32 bits of the reference position can also be addressed separately. The result is interpreted as a signed value.

Data type	Values
DINT	-2,147,483,648 to 2,147,483,647

4.8.5 Counter for reference values

Name:
RefCycle

This register acts as an integer counter that is incremented as soon as the module has determined a new valid reference value.

Data type	Values
SINT	-128 to 127

4.9 DATA_to_SafeDATA

Function DATA_to_SafeDATA determines a safe signal from 2 independent standard signals. For this purpose, the standard data of 2 I/O modules are transferred to the SafeLOGIC controller and compared with each other there. With the functions provided in SafeDESIGNER, the resulting data can be used for applications up to PL d.

Function DATA_to_SafeDATA is enabled and the register calls take place using SafeDESIGNER. For more detailed information about the calls, see library DATA_to_SafeDATA_SF contained in SafeDESIGNER.

4.9.1 Counter state of the encoder

Name:
Position

This register represents the counter value of the encoder. The register is only active if function DATA_to_SafeDATA is enabled.

Data type	Values
DINT	-2,147,483,648 to 2,147,483,647

4.9.2 NetTime of the counter value

Name:
PosTime

This register represents the NetTime of the most recent valid counter value. The register is only active if function DATA_to_SafeDATA is enabled.

For a description of NetTime Technology, see "NetTime Technology" on page 15.

Data type	Values
DINT	-2,147,483,648 to 2,147,483,647

4.9.3 Displaying the SourceRef address

Name:
DTS_SourceRef

This register cyclically displays the SourceRef address set in the configuration. The register is only active if function DATA_to_SafeDATA is enabled.

Data type	Values
INT	-32768 to 32767

4.9.4 Checksum

Name:
DTS_CheckSum

This register contains a checksum formed from the 3 cyclic data points Position, PosTime and DTS_SourceRef. The register is only active if function DATA_to_SafeDATA is enabled.

Data type	Values
INT	-32768 to 32767

4.9.5 SourceRef address

Name:
CfO_DTS_SourceRef

This register contains the acyclically configurable SourceRef address that is transmitted back by the module as a cyclic data point. The register is only active if function DATA_to_SafeDATA is enabled.

Data type	Values
INT	-32768 to 32767

4.9.6 Constant cycle register

Name:
CfO_DTS_CycleSelect

This register determines the cycle used internally and is not permitted to be changed.

Data type	Value
USINT	2

4.10 NetTime Technology

NetTime refers to the ability to precisely synchronize and transfer system times between individual components of the controller or network (CPU, I/O modules, X2X Link, POWERLINK, etc.).

This allows the moment that events occur to be determined system-wide with microsecond precision. Upcoming events can also be executed precisely at a specified moment.

4.10.1 Time information

Various time information is available in the controller or on the network:

- System time (on the PLC, Automation PC, etc.)
- X2X Link time (for each X2X Link network)
- POWERLINK time (for each POWERLINK network)
- Time data points of I/O modules

The NetTime is based on 32-bit counters, which are increased with microsecond resolution. The sign of the time information changes after 35 min, 47 s, 483 ms and 648 µs; an overflow occurs after 71 min, 34 s, 967 ms and 296 µs.

The initialization of the times is based on the system time during the startup of the X2X Link, the I/O modules or the POWERLINK interface.

Current time information in the application can also be determined via library AsIOTime.

4.10.1.1 PLC/Controller data points

The NetTime I/O data points of the PLC or the controller are latched to each system clock and made available.

4.10.1.2 X2X Link - Reference moment

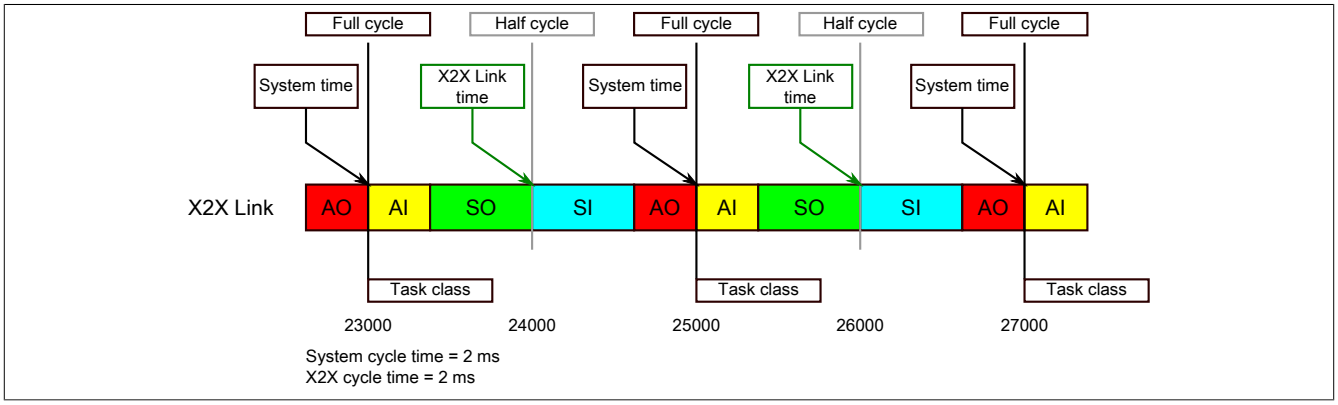

The reference moment on the X2X Link network is always calculated at the half cycle of the X2X Link cycle. This results in a difference between the system time and the X2X Link reference moment when the reference time is read out.

In the example above, this results in a difference of 1 ms, i.e. if the system time and X2X Link reference moment are compared at time 25000 in the task, then the system time returns the value 25000 and the X2X Link reference moment returns the value 24000.

4.10.1.3 POWERLINK reference moment

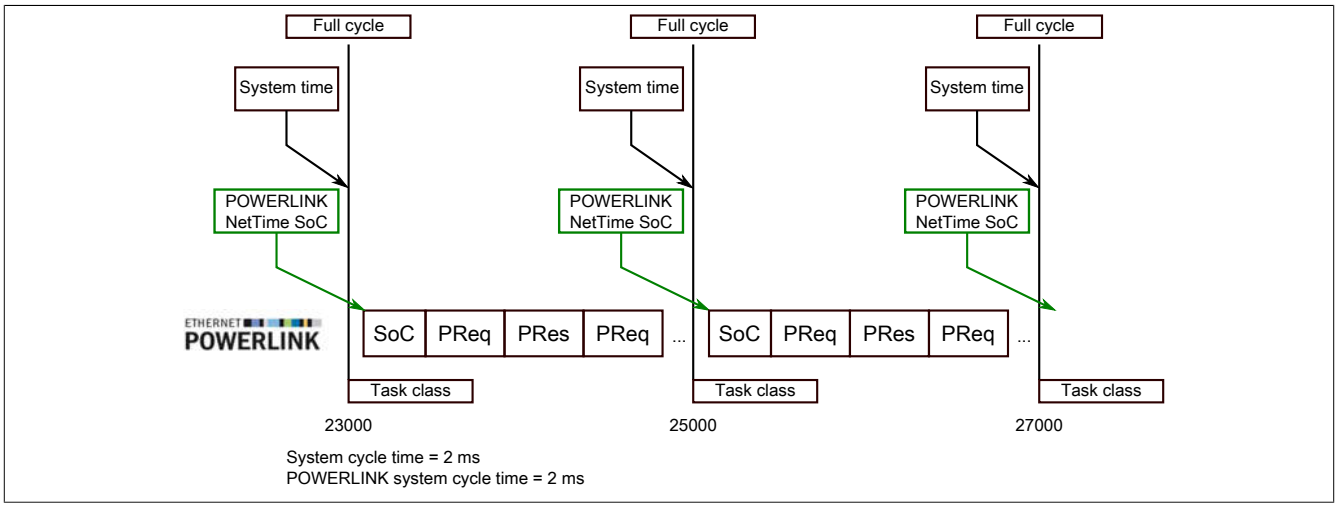

The reference moment on the POWERLINK network is always calculated at the start of cycle (SoC) of the POWERLINK network. The SoC starts 20 µs after the system tick. This results in the following difference between the system time and the POWERLINK reference time:

POWERLINK reference time = System time - POWERLINK cycle time + 20 µs.

In the example above, this means a difference of 1980 µs, i.e. if the system time and POWERLINK reference moment are compared at time 25000 in the task, then the system time returns the value 25000 and the POWERLINK reference moment returns the value 23020.

4.10.1.4 Synchronization of system time/POWERLINK time and I/O module

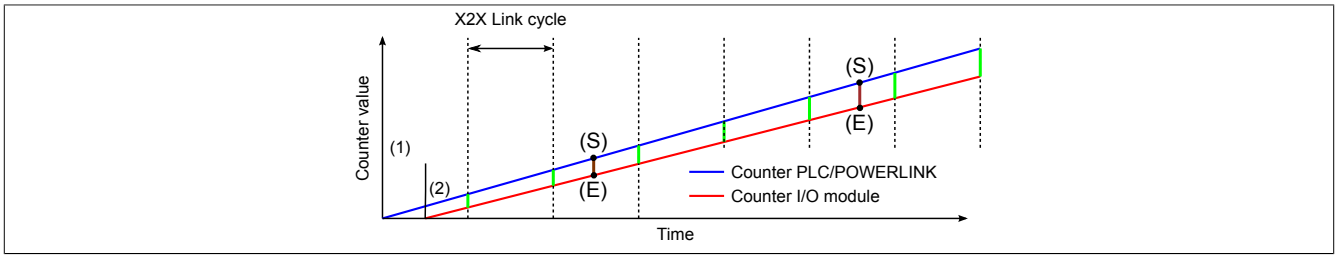

At startup, the internal counters for the PLC/POWERLINK (1) and the I/O module (2) start at different times and increase the values with microsecond resolution.

At the beginning of each X2X Link cycle, the PLC or the POWERLINK network sends time information to the I/O module. The I/O module compares this time information with the module's internal time and forms a difference (green line) between the two times and stores it.

When a NetTime event (E) occurs, the internal module time is read out and corrected with the stored difference value (brown line). This means that the exact system moment (S) of an event can always be determined, even if the counters are not absolutely synchronous.

Note

The deviation from the clock signal is strongly exaggerated in the picture as a red line.

4.10.2 Timestamp functions

NetTime-capable modules provide various timestamp functions depending on the scope of functions. If a timestamp event occurs, the module immediately saves the current NetTime. After the respective data is transferred to the CPU, including this precise moment, the CPU can then evaluate the data using its own NetTime (or system time), if necessary.

4.10.2.1 Time-based inputs

NetTime Technology can be used to determine the exact moment of a rising edge at an input. The rising and falling edges can also be detected and the duration between 2 events can be determined.

> **Information:**
>
> **The determined moment always lies in the past.**

4.10.2.2 Time-based outputs

NetTime Technology can be used to specify the exact moment of a rising edge on an output. The rising and falling edges can also be specified and a pulse pattern generated from them.

> **Information:**
>
> **The specified time must always be in the future, and the set X2X Link cycle time must be taken into account for the definition of the moment.**

4.10.2.3 Time-based measurements

NetTime Technology can be used to determine the exact moment of a measurement that has taken place. Both the starting and end moment of the measurement can be transmitted.

4.11 Minimum cycle time

The minimum cycle time specifies how far the bus cycle can be reduced without communication errors occurring. It is important to note that very fast cycles reduce the idle time available for handling monitoring, diagnostics and acyclic commands.

Minimum cycle time
100 µs

4.12 Minimum I/O update time

The minimum I/O update time specifies how far the bus cycle can be reduced so that an I/O update is performed in each cycle.

Minimum I/O update time
100 µs