RF200150

Motor protection relay, phase failure/single-phase sensitive. Three-pole (three-phase), manual or automatic resetting, 90...150A



Product designation			RF200
Product type designation			Motor protection relay
General characteristics			
Number of poles		Nr.	3
Overvoltage category			III
Pollution degree			3
Frontal IP degree			IP20
Type of release			Thermal
Protection fuse			
	gG (IEC)	A	250
	aM (IEC)	A	160
	K5 (UL)	A	500
Phase failure detection			No
Reset mode			Manual or automatic
Power circuit characteristics			
Rated insulation voltage Ui IEC/EN		V	1000
Rated impulse withstand voltage Uimp		kV	6
Rated operational voltage		V	690
Operational frequency			
	min	Hz	50
	max	Hz	60
Operational current Ie			
	Operational current min	A	90
	Operational current max	A	150
Tripping class			10A
Test Button			Yes
Trip indicator			Yes
Terminals			
	type		screw and flat washer
	screw		M8
	width	mm	20
	tool		Bar 13mm
Tightening torque for terminals			
	min	Nm	18
	max	Nm	18
	min	lbin	13.3
	max	lbin	13.3
Auxiliary circuit characteristics			
Auxiliary contacts			
	NO	Nr.	1
	NC	Nr.	1
Auxiliary Rated insulation voltage Ui IEC/EN		V	690

The characteristics described in this document are subject to updates or modifications at any time. The descriptions, technical and functional information, illustrations and instructions in this brochure are purely illustrative, and are consequently not contractually binding

Auxiliary Rated impulse withstand voltage Uimp		kV	6
Auxiliary Rated operational voltage		V	690
Operating current AC15			
	24V	A	3
	120V	A	3
	240V	A	1.5
	380V	A	0.95
	480V	A	0.75
	500V	A	0.72
	600V	A	0.6
Operating current DC13			
	125V	A	0.11
	600V	A	0.22
IEC Conventional free air thermal current Ith		A	10
Terminals			
	Auxiliary circuit type		Screw and washer
	Auxiliary circuit screw		M3,5
	Auxiliary circuit width	mm	8
	Auxiliary circuit tool		Phillips 2
Conductor section			
	Auxiliary circuit Flexible w/o lug max	mm²	2.5
	Auxiliary circut Flexible c/w lug max	mm²	2.5
Tightening torque for terminals			
	Auxiliary circuit min	Nm	0.8
	Auxiliary circuit max	Nm	1
	Auxiliary circuit min	lbin	0.59
	Auxiliary circuit max	lbin	0.74
UL/CSA and IEC/EN 60947-5-1 designation			B600-R300
Ambient conditions			
Operating temperature			
	min	°C	-25
	max	°C	60
Storage temperature			
	min	°C	-50
	max	°C	70
Compensation temperature			
	min	°C	-20
	max	°C	60
Max altitude		m	3000
Mechanical features			
Operating position			
	normal		Vertical plan
	allowable		±30°
Fixing			Screw
Weight		g	2150
UL technical data			
Full-load current (FLA) for three-phase AC motor			
	at 480V	A	150
	at 600V	A	150
Dimensions			

The characteristics described in this document are subject to updates or modifications at any time. The descriptions, technical and functional information, illustrations and instructions in this brochure are purely illustrative, and are consequently not contractually binding

RF200150

Motor protection relay, phase failure/single-phase sensitive. Three-pole (three-phase), manual or automatic resetting, 90...150A

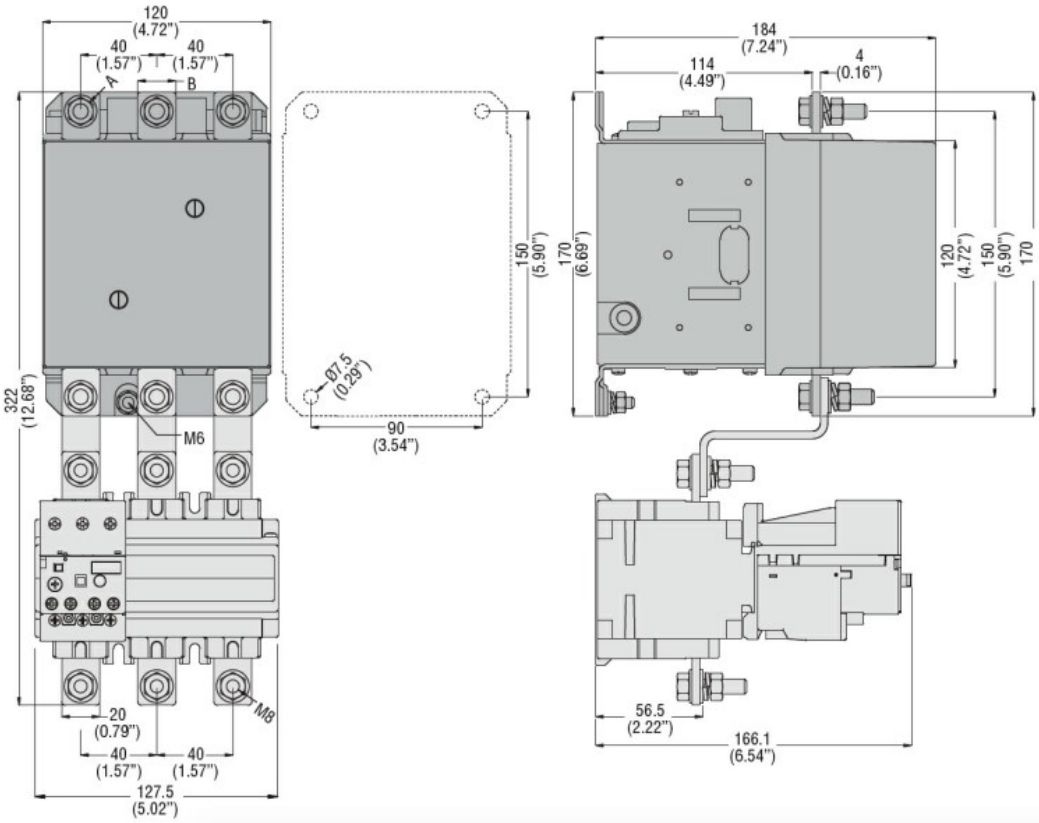

CONTACTOR TYPE	A	B
B115	M6	15 (0.59")
B145	M8	20 (0.79")
B180	M8	20 (0.79")

Wiring diagrams

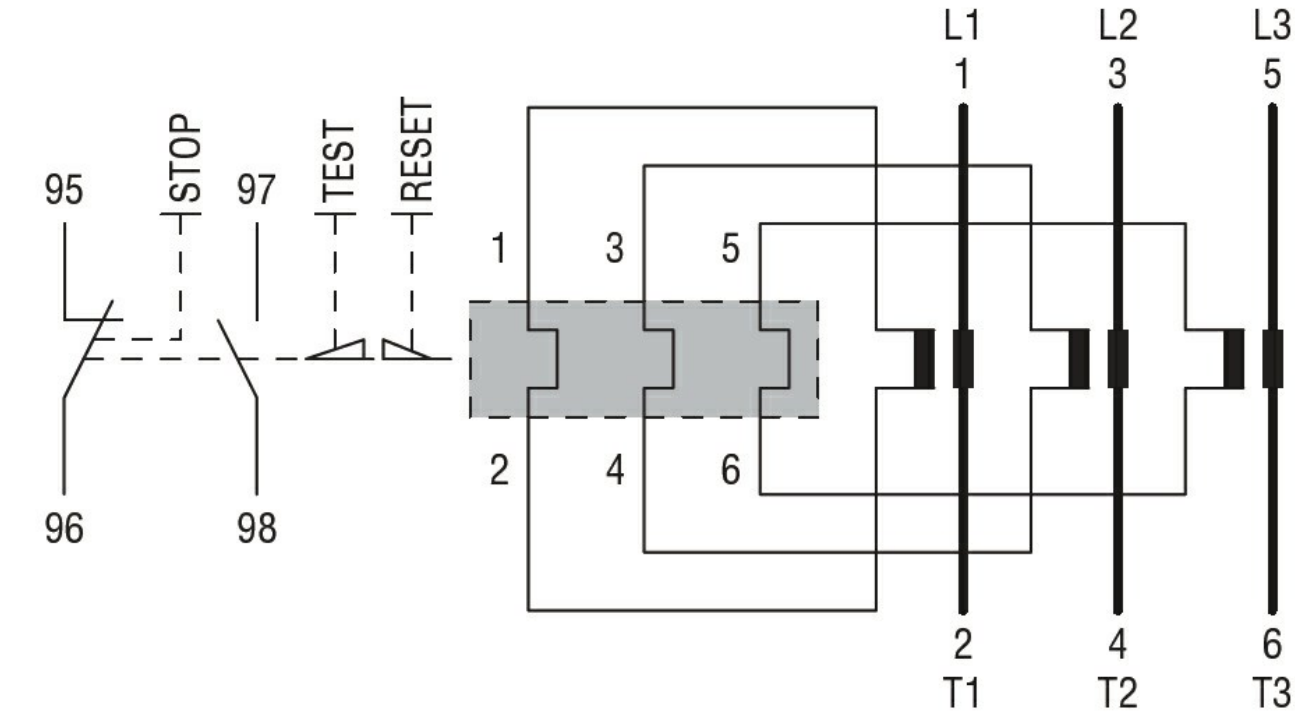

Certifications and compliance

Compliance

CSA C22.2 n° 14
IEC/EN 60947-1
IEC/EN 60947-4-1
UL508

Certifications

The characteristics described in this document are subject to updates or modifications at any time. The descriptions, technical and functional information, illustrations and instructions in this brochure are purely illustrative, and are consequently not contractually binding

cULus	
EAC	

ETIM classification

ETIM 8.0	EC000106 - Thermal overload relay

The characteristics described in this document are subject to updates or modifications at any time. The descriptions, technical and functional information, illustrations and instructions in this brochure are purely illustrative, and are consequently not contractually binding