

PFT 25 TF

Oval flanged ball bearing unit with pressed steel housing

Oval flanged ball bearing units with pressed steel housing consist of an insert bearing mounted in a pressed steel housing that can be bolted to a machine wall or frame. In addition to being part of a unit, housings and insert bearings are available as separate components. The SKF assortment includes ball bearing units compliant with several industrial standards, meeting many requirements regarding bolt patterns and mechanisms for locking onto on the shaft.

- Ready to mount
- Sealed bearings lubricated for life
- Quick locking on the shaft
- Large variety of housing shapes, housing materials, and locking methods
- Concentric locking options for high speeds and low vibration

Overview

Dimensions

Bearing width, total	34.1 mm
Centre distance between bolt holes	76.2 mm
Housing overall width	18 mm
Shaft diameter	25 mm

Performance

Basic dynamic load rating	14 kN
Basic static load rating	7.8 kN
Limiting speed	7 000 r/min

Properties

Bore type	Cylindrical
Coating	Housing coated
Fastening bolt hole type	Plain
Flanged housing type	Oval
Housing type	Flanged
Lubricant	Grease
Material, bearing	Bearing steel
Material, housing	Pressed steel
Number of bolt holes for fasteners	2
Relubrication hole	Without
Relubrication nipple	Without
Retaining feature, inner ring	Set screws
Rubber seating ring	Without

Sealing type	Contact, standard
Sealing, bearing	Seal and flinger on both sides
Sealing, unit	Without

Technical Specification

Compliance with standard	ISO
Purpose specific	For material handling applications
Housing material	Pressed steel
Sealing solution	Standard seals with additional flingers

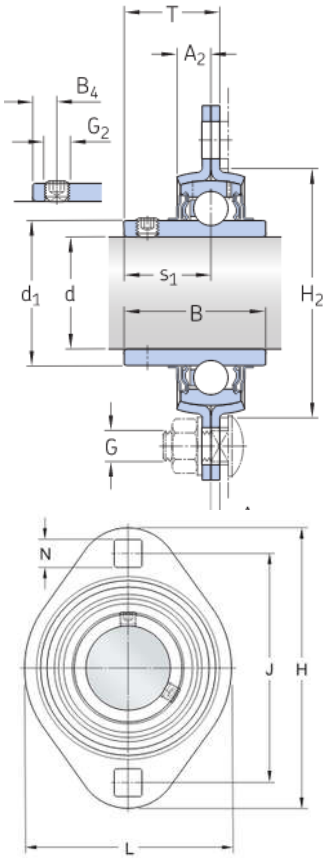

Dimensions

d	25 mm	Bore diameter
d_1	≈ 33.74 mm	Outer diameter inner ring
A_2	9 mm	Width housing half
A_4	2 mm	Material thickness
B	34.1 mm	Width of inner ring
B_4	5 mm	Distance from locking device side face to thread centre
H	95 mm	Overall height
H_2	min. 56 mm	Abutment diameter
J	76.2 mm	Distance between attachment bolts
L	71 mm	Overall length
N	8.7 mm	Diameter of attachment bolt hole
s_1	19.8 mm	Distance from locking device side face to raceway centre
T	34.1 mm	Overall unit width

Calculation data

Basic dynamic load rating	C	14 kN
Basic static load rating	C_0	7.8 kN
Fatigue load limit	P_u	0.335 kN

Permissible radial load		max. 3.6 kN
Limiting speed		7 000 r/min
with shaft tolerance h6		

Mass

Mass bearing unit		0.3 kg

Mounting information

Set screw	G_2	M6x0.75
Hexagonal key size for set screw		3 mm
Recommended tightening torque for set screw		4 Nm
Recommended diameter for attachment bolts, mm	G	8 mm
Recommended diameter for attachment bolts, inch	G	0.3125 in

Included products

Housing	PFT 52
Bearing	YAR 205-2F

Terms and conditions

By accessing and using this website / app owned and published by AB SKF (publ.) (556007-3495 · Gothenburg) ("SKF"), you agree to the following terms and conditions:

Warranty Disclaimer and Limitation of Liability

Although every care has been taken to assure the accuracy of the information on this website / app, SKF provides this information "AS IS" and DISCLAIMS ALL WARRANTIES, EXPRESS OR IMPLIED, INCLUDING, BUT NOT LIMITED TO, IMPLIED WARRANTIES OF MERCHANTABILITY AND FITNESS FOR A PARTICULAR PURPOSE. You acknowledge that your use of this website / app is at your sole risk, that you assume full responsibility for all costs associated with use of this website / app, and that SKF shall not be liable for any direct, incidental, consequential, or indirect damages of any kind arising out of your access to, or use of the information or software made available on this website / app. Any warranties and representations in this website / app for SKF products or services that you purchase or use will be subject to the agreed upon terms and conditions in the contract for such product or service. Further, for non-SKF websites / apps that are referenced in our website / app or where a hyperlink appears, SKF makes no warranties concerning the accuracy or reliability of the information in these websites / apps and assumes no responsibility for material created or published by third parties contained therein. In addition, SKF does not warrant that this website / app or these other linked websites / apps are free from viruses or other harmful elements.

Copyright

Copyright in this website / app copyright of the information and software made available on this website / app rest with SKF or its licensors. All rights are reserved. All licensed material will reference the licensor that has granted SKF the right to use the material. The information and software made available on this website / app may not be reproduced, duplicated, copied, transferred, distributed, stored, modified, downloaded or otherwise exploited for any commercial use without the prior written approval of SKF. However, it may be reproduced, stored and downloaded for use by individuals without prior written approval of SKF. Under no circumstances may this information or software be supplied to third parties.
This website /app includes certain images used under license from Shutterstock, Inc.

Trademarks and Patents

All trademarks, brand names, and corporate logos displayed on the website / app are the property of SKF or its licensors, and may not be used in any way without prior written approval by SKF. All licensed trademarks published on this website / app reference the licensor that has granted SKF the right to use the trademark. Access to this website / app does not grant to the user any license under any patents owned by or licensed to SKF.

Changes

SKF reserves the right to make changes or additions to this website / app at any time.