HK 4012

Dimensions

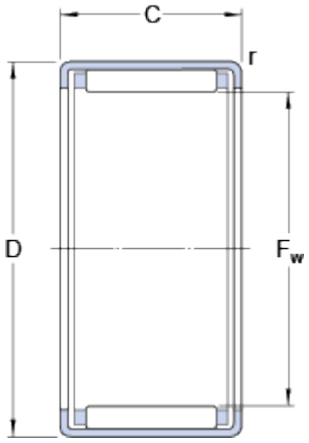

F_w		40	mm
D		47	mm
C		12	mm
r	min.	0.8	mm

Calculation data

Basic dynamic load rating	C	13.4	kN
Basic static load rating	C_0	24.5	kN
Fatigue load limit	P_u	2.8	kN
Reference speed		6300	r/min
Limiting speed		7000	r/min

Mass

Mass bearing	0.03	kg

Appropriate products

Inner ring LR series	LR 35x40x12.5
Radial shaft seal with a low cross-sectional height, single lip	G 40x47x4
Radial shaft seal with a low cross-sectional height, double lip	SD 40x47x4