John Guest Product Data Sheet

22mm to 15mm Polyethylene Reducer PEM062215W

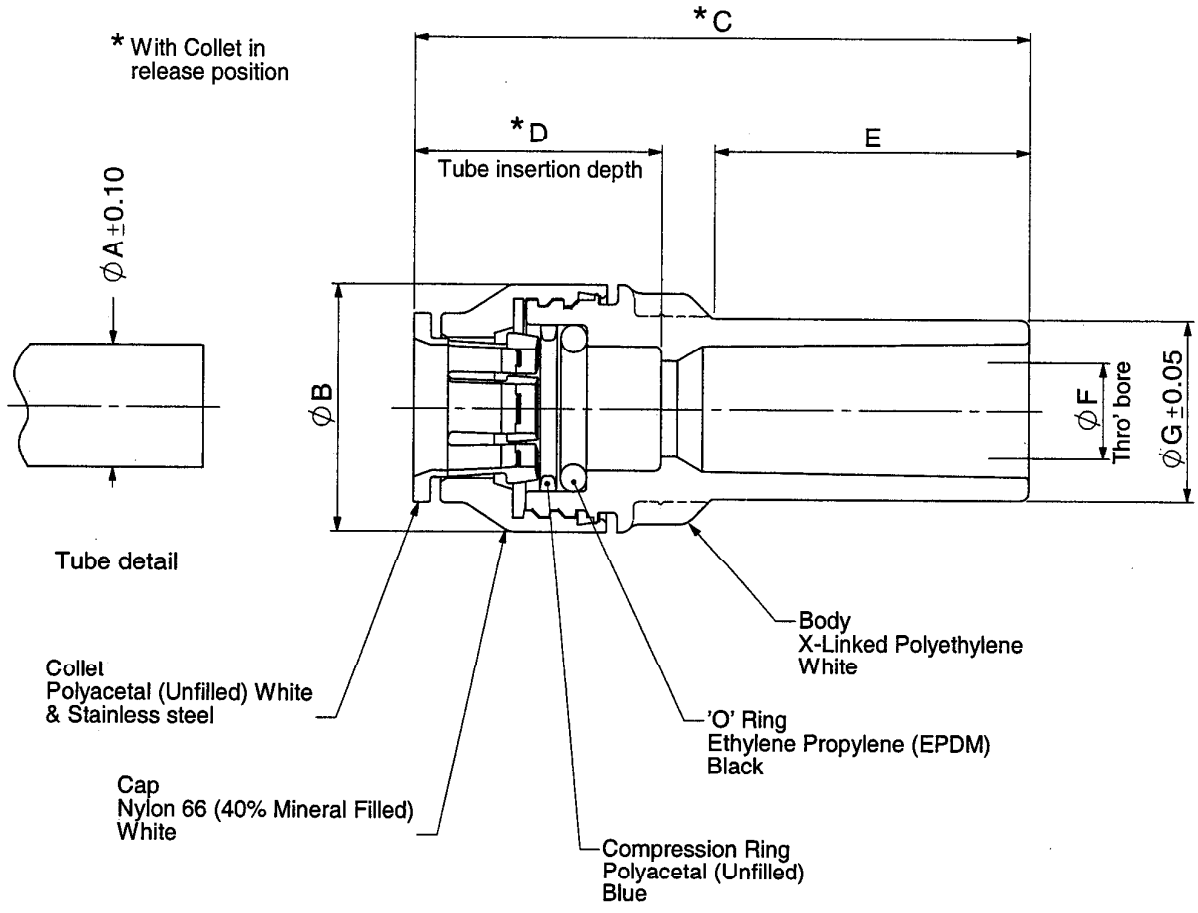

Dia A	Dia B	Dim C	Dim D	Dim E	Dia F	Dia G
15.0	30.0	74.7	29.5	39.1	11.7	22.0

Dimensions in mm

THE COPYRIGHT IN THIS DRAWING AND THE PRODUCTS REFERRED THEREON BELONG TO JOHN GUEST INTERNATIONAL LIMITED AND THIS DRAWING NOR THE INFORMATION CONTAINED HEREIN SHALL BE PRODUCED IN ANY FORM OR USED FOR ANY PURPOSE WITHOUT WRITTEN CONSENT © 2002

The company has a policy of continuous research and development and reserves the right to amend without notice the specification and design of all products illustrated. For details of terms and conditions and any other technical enquiries, please contact our Customer Services Department.

ECN12422

ISSUE 3 29-05-02

023103-C-1500 MCL1

DS-PEM062215W