EHA3

Hand switch



Benefits

- Robust ergonomic design
- Tactile buttons, clearly marked
- Easy mountable fastening hook

Technical data

	Unit	EHA 3
Max. operating channels	n°	5
Operating power	V DC/mA	12/50
Type of protection	IP	67
Color	–	Grey
Cable: Coiled 1,3 m/2,5 m	–	D-sub 15-pin

Dimensional drawing

High density
D-Sub 15

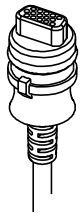

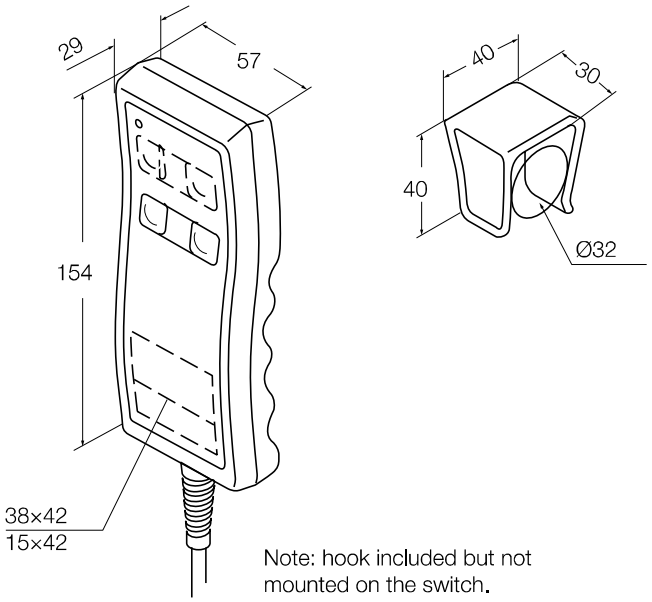

Note: hook included but not mounted on the switch.

Suitable control units and pillars

	Pillars		Control units							
	TFG 50	TFG 90	SCU 1	SCU 5	SCU 9	VCU 5	VCU 8	VCU 9	BCU 5	BCU 8
EHA3	•	•	•	•	•	•	•	•	•	•

Accessories

Description	Designation	Order number
Hook with sticker	ZBG–145361–000	0125538

Ordering keys



Type

Number of channels

1	1 channel
2	2 channels
3	3 channels
4	4 channels
5	5 channels
A	1 channel with 3 memory positions (only for SCU)
B	2 channels with 3 memory positions (only for SCU)
C	3 channels with 3 memory positions (only for SCU)

Symbols

00	None	
10	1 channel: 2nd row from top	Arrow up/down
11		Head
12		Foot
13		Level
14		Anti-Trendelenburg
20	2 channels: 1st-2nd row from top	Arrow up/down
21		Head/foot
22		Head/level
23		Level/head
29		Level/Anti-Trendelenburg
30	3 channels: 1st-3rd row from top	Arrow up/down
31		Head/foot/level
32		Level/head/foot
39		Level/Anti-Trendelenburg/Head
40	4 channels: 1st-4th row from top	Arrow up/down
47		Level/Anti-Trendelenburg/Head/Foot
50	5 channels: 1st-5th row from top	Arrow up/down

■ Options shown in red are only available on demand. Please contact Ewellix.