Brand of NTN corporation

Technical data

USFE205

Bearing units



Grey cast housing, radial insert ball bearing with socket set screws, single lip seal

KIT CONTENT

US205G2, FE205

VISUAL (S)

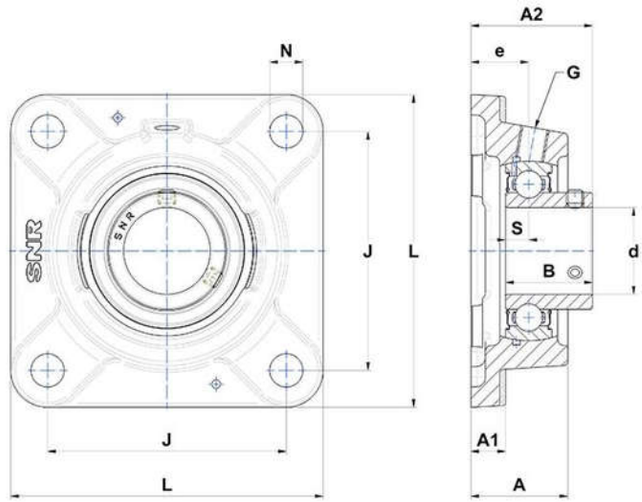

PRODUCT DEFINITION

Brand	SNR
A - Housing height	30 mm
A1 - Housing foot height / flange height	11 mm
A2 - Total height from mounting surface	38,5 mm
B - Width of Inner Ring	27 mm
d - Shaft diameter	25 mm

PRODUCT DEFINITION	
e - Distance mounting surface to bearing center	19 mm
G - Grease fitting	R1/8"
J - Mounting holes distance	70 mm
L - Housing width / diameter	95 mm
N - Mounting hole dimension	11,5 mm
S - Distance front side/bearing centre	7,5 mm

PRODUCT PERFORMANCE	
C - Dynamic load rating	14000000 mN
C0 - Static load rating	7880000 mN
Operating temperature min.	253,15 °K
Operating temperature max.	373,15 °K

OTHER FEATURES	
Mass	0,77 kg
Recommended tightening torque for set screw	5.5 N-m