204306
ISDP 70 NSK-TSSL
Inductive Tube Sensor

- Standard sensitivity
- Dynamic operating principle
- Automatic hiding of metallic contamination
- Compact design
- Low weight
- Metal connector M8
- Slot for quick mounting
- Cable tie contained in scope of delivery



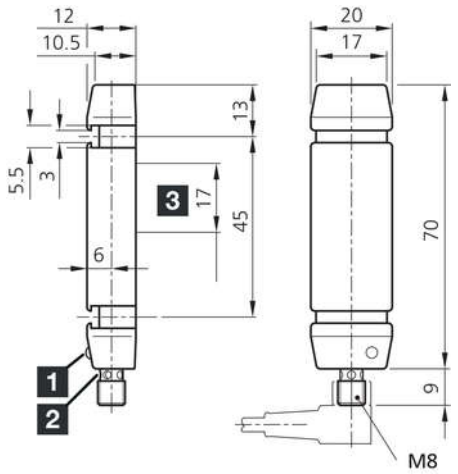

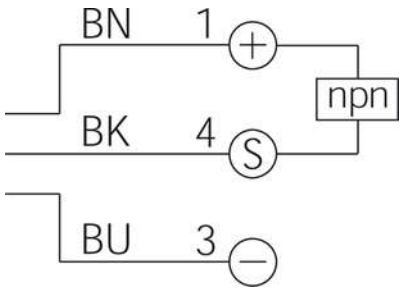

1) LED OPERATION
2) LED OUTPUT
3) Detection range

BK: black
BN: brown
BU: blue

Function

Technical data (typ.)	+20°C, 24 V DC
Service voltage	10 … 35 V DC (Supply Class 2)
No-load current (max.)	25 mA
Insulation voltage endurance	500 V
Housing length	70 mm
Housing height	12 mm
Housing width	20 mm
Housing material	Plastic (PC)
Material of cable	Polyurethane
Protection class	III, operation on protective low voltage
Approvals	UL
Operating principle	inductive
Evaluation	Dynamic
Design	Cuboid design
Characteristics	Resistant
Switching output	npn, 200 mA, NO
Voltage drop (max.)	2 V
Pulse stretching	100 ms
Switching distance	14 mm
Display	LED Green - Operation, yellow - Switching output
Speed of parts (max.)	35 m/s

204306
ISDP 70 NSK-TSSL
Inductive Tube Sensor

Technical data (typ.)	+20°C, 24 V DC
Speed of parts (min.)	0.3 m/s
Response time	0.20 ms
Release time	100 ms
Shock/vibration load	30 g, 11 ms / 10 … 55 Hz, 1.0 mm
Ambient temperature during operation	-25 … +70 °C
Protection type	IP 67
Connection	Connector, M8, 3-pin
Connection cable	TK …

More information / accessories	https://www.di-soric.com/204306

© di-soric . Right to change reserved