210887
OGU 081 G3-T3/V4A
Fork light barrier

- Robust stainless steel housing for use in the pharmaceutical, beverage and food industries
- 4 operating modes as an IO-Link parameter
- Switch-on/off delay as an IO-Link parameter
- Diagnostics with IO-Link
- Sensitivity is adjustable
- High switching frequency
- Light/dark switching
- Bright ring LED
- High protection type
- 5-year warranty



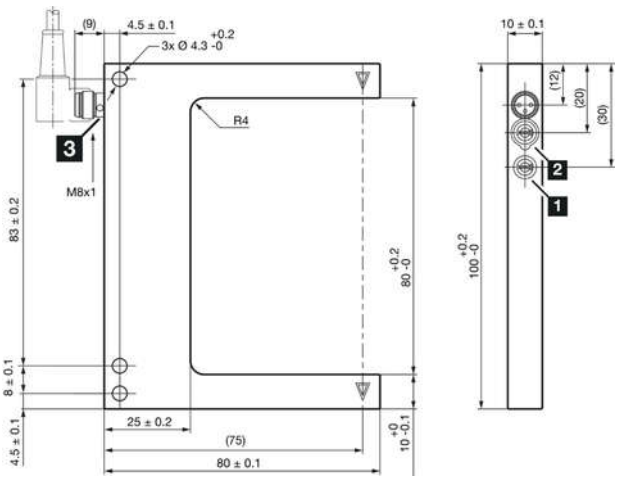

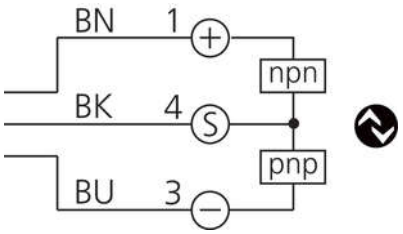

1) Potentiometer
2) NO/ NC
3) LED

BK: black BN: brown BU: blue

Function

IO-Link

Technical data (typ.)	+20°C, 24 V DC
Service voltage	10 … 30 V DC
No-load current (max.)	30 mA
Insulation voltage endurance	500 V
Leg length internal	55 mm
Housing dimensions	100 x 80 x 10 mm
Housing length	80 mm
Housing height	100 mm
Housing width	10 mm
Housing material	Stainless steel (V4A, 1.4404 / AISI 316L - 1.4571 / AISI 316Ti)
Protection class	III, operation on protective low voltage
Operating principle	Optical
Evaluation	digital
Design	Fork
Operation modes	STANDARD, HIGH RESOLUTION, POWER, SPEED
Switching output	Push-pull, 100 mA, NO/NC, switchable
Interface	IO-Link (V1.1, COM2 38.4 kBd, Smart Sensor Profile)
Light source	LED
Color	red
Modulation	Clocked
Fork opening	80 mm

di-soric GmbH & Co. KG . Steinbeisstraße 6 . DE-73660 Urbach . www.di-soric.com

210887
OGU 081 G3-T3/V4A
Fork light barrier

Technical data (typ.)	+20°C, 24 V DC
Resolution (factory setting)	0,3 mm (STANDARD)
Reproducibility (factory setting)	0,02 mm (STANDARD)
Resolution (STANDARD)	0,3 mm
Reproducibility (STANDARD)	0,02 mm
Resolution (HIGH RESOLUTION)	0,2 mm
Reproducibility (HIGH RESOLUTION)	0,02 mm
Resolution (POWER)	1 mm
Reproducibility (POWER)	0,02 mm
Resolution (SPEED)	0,3 mm
Reproducibility (SPEED)	0,02 mm
Sensitivity adjustment	Potentiometer or IO-Link
Switching frequency (factory setting)	5.000 Hz (STANDARD)
Switching frequency (STANDARD)	5.000 Hz
Switching frequency (HIGH RESOLUTION)	1.500 Hz
Switching frequency (POWER)	250 Hz
Switching frequency (SPEED)	8.000 Hz
Ambient temperature during operation	-25 … +60 °C
Protection type	IP 67
Connection	Connector, M8, 3-pin
Connection cable	TK …

More information / accessories	https://www.di-soric.com/210887

© di-soric . Right to change reserved