E21202

Mounting set for position sensors

M12 ANGLE BRACKET **200**

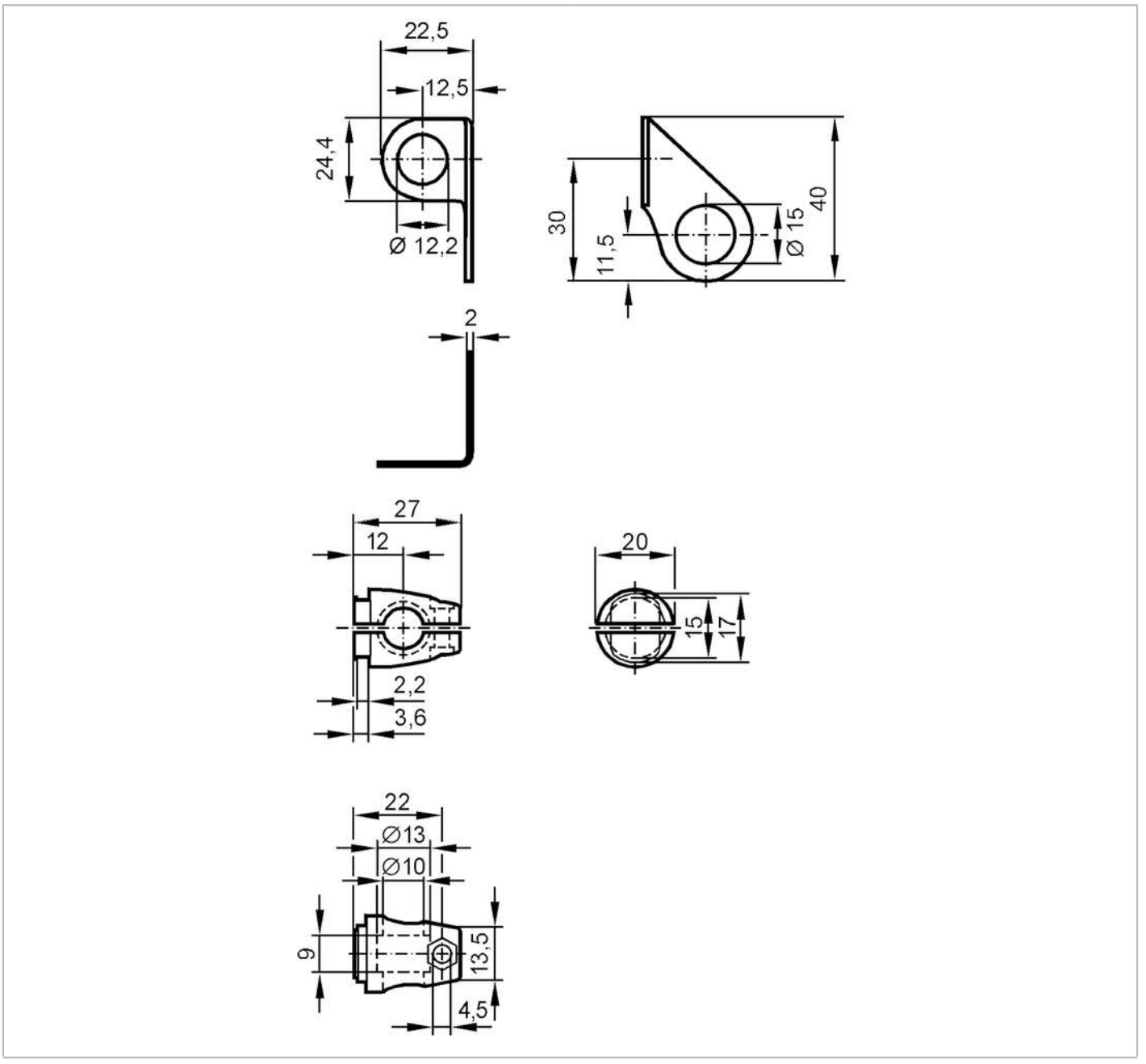

Application		
Design		clamp mounting
Mechanical data		
Weight	[g]	48.5
Type of mounting		Mounting rod; (Ø 10 mm)
Dimensions	[mm]	Ø 12.2
Materials		fixture: stainless steel (1.4571/316Ti); Clamp: diecast zinc
Remarks		
Pack quantity		1 pcs.