KG5303

Capacitive sensor

KG-3150NBPKG/SL/1P/IO

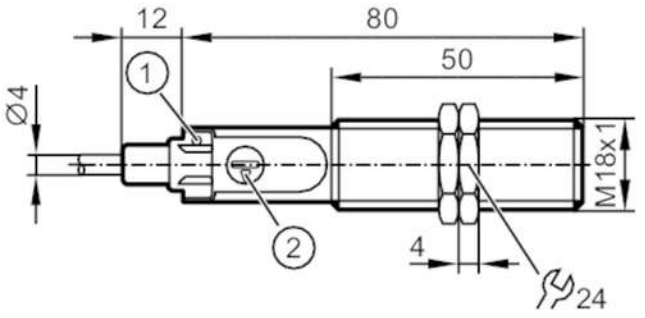

1 LED yellow switching status

Product characteristics		
Electrical design		PNP
Output function		normally open
Sensing range	[mm]	0.5...30
Communication interface		IO-Link
Housing		threaded type
Dimensions	[mm]	M18 x 1 / L = 92.5
Application		
Medium temperature	[°C]	-25...110
Electrical data		
Operating voltage	[V]	10...30 DC
Current consumption	[mA]	< 22
Protection class		III
Reverse polarity protection		yes
Outputs		
Electrical design		PNP
Output function		normally open
Max. voltage drop switching output DC	[V]	2.5
Permanent current rating of switching output DC	[mA]	200
Switching frequency DC	[Hz]	30
Short-circuit proof		yes
Overload protection		yes
Detection zone		
Sensing range	[mm]	0.5...30
Sensing range adjustable		yes
Factory setting sensing range	[mm]	15
Real sensing range Sr	[mm]	15 ± 10 %
Accuracy / deviations		
Hysteresis	[% of Sr]	1...15

KG5303

Capacitive sensor

KG-3150NBPKG/SL/1P/IO

Switch point drift	[% of Sr]	-15...15	
Interfaces			
Communication interface		IO-Link	
Transmission type		COM2 (38,4 kBaud)	
IO-Link revision		1.1	
SDCI standard		IEC 61131-9	
Profiles		Smart Sensor: Process Data Variable; Device Identification	
SIO mode		yes	
Required master port type		A	
Min. process cycle time	[ms]	20	
IO-Link functions (acyclical)		application specific tag; operating hours counter; normally open / normally closed (configurable); PNP / NPN (parametrierbar); switch point setting; Hysteresis	
Operating conditions			
Ambient temperature	[°C]	-25...80	
Protection		IP 65; IP 67; IP 69K	
Tests / approvals			
EMC		EN 61000-4-2	30 kV AD / 4 kV CD
		EN 61000-4-3	10 V/m
		EN 61000-4-4	2 kV
		EN 61000-4-6	10 V
		EN 55011	class B
Vibration resistance		DIN EN 60947-5-2	1 mm amplitude, oscillation period 5 min., 30 min. per axis at resonance or 55 Hz
Shock resistance		DIN EN 60947-5-2	30 g 6 shocks / 11 ms half-sine (x, y, z)
MTTF	[years]	1269	
UL approval		Ta	-25...60 °C
		Enclosure type	Type 1
		power supply	Limited Voltage/Current
		UL Approval no.	D004
		File number UL	E174191
Mechanical data			
Weight	[g]	72.8	
Housing		threaded type	
Mounting		non-flush mountable	
Dimensions	[mm]	M18 x 1 / L = 92.5	
Thread designation		M18 x 1	
Materials		PBT; PC; POM	
Tightening torque	[Nm]	8	
Displays / operating elements			
Display		switching status	1 x LED, yellow
Accessories			
Items supplied		lock nuts: 2	
Remarks			
Pack quantity		1 pcs.	

KG5303

Capacitive sensor

KG-3150NBPKG/SL/1P/IO

Electrical connection

Cable: 2 m, PUR, Ø 4 mm; 3 x 0.34 mm²

Connection

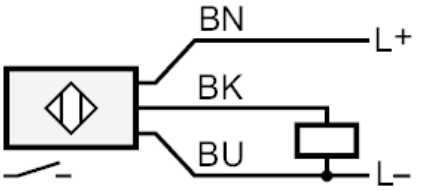

BK:	OUT / IO-Link
	Core colours :
BK =	black
BN =	brown
BU =	blue