

Image may differ from product. See technical specification for details.

OH 2344 H

Adapter sleeve for oil injection mounting with HM .. T lock nut and MB lock washer, metric dimensions

Adapter sleeves are the most commonly used components for locating bearings with a tapered bore onto a cylindrical seat as they can be used on plain shafts or stepped shafts. These sleeves enable use of the oil injection method to mount and dismount bearings, and

they are slit and are supplied complete with a lock nut and locking device. They are easy to install and require no additional location on the shaft.

- Easy to install
- Complete with lock nut
- Complete with locking device

Overview

Dimensions

Bore diameter	200 mm
Width	186 mm
Thread designation	Tr 220x4

Properties

Taper	1:12
Holes for oil injection	With

Logistics

Product net weight	15.9 kg
eClass code	23-11-07-05
UNSPSC code	31163218

Technical specification

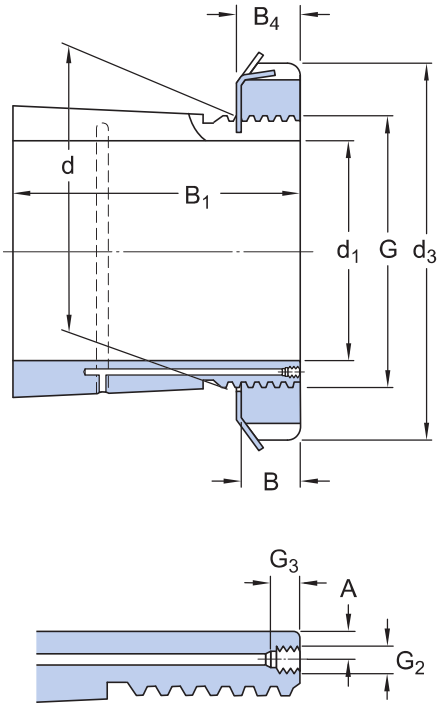

Dimensions

d_1	200 mm	Bore diameter
d	220 mm	Outside diameter small taper
d_3	280 mm	Outside diameter lock nut
B_1	186 mm	Width
B	32 mm	Width lock nut
B_4	35 mm	Width lock nut including lock washer
G	Tr 220x4	Thread
G_2	M6	Thread oil supply duct
G_3	10 mm	Length thread for oil supply duct
A	3.9 mm	Distance bore - oil supply duct
	1:12	External taper

Included products

Lock nut	HM 44 T
Locking device	MB 44

Associated products

Hydraulic nut	HMV 44E

Compatible products

Component

Lock or dismounting nut with metric trapezoidal thread	HM 44 T
Lock washer for metric lock nuts	MB 44

Recommended product

Hydraulic nut for mounting or dismounting of bearings	HMV 44E

More Information

Product details

- Designs and variants
- General product specifications
- Designation system

Tools

- Tool and Accessory Selector for sleeves and shafts
- Oil Injection Method Program

Terms of use

By accessing and using this website / app owned and published by AB SKF (publ.) (556007-3495 · Gothenburg) (“SKF”), you agree to the following terms and conditions:

Warranty Disclaimer and Limitation of Liability
Although every care has been taken to assure the accuracy of the information on this website / app, SKF provides this information "AS IS" and DISCLAIMS ALL WARRANTIES, EXPRESS OR IMPLIED, INCLUDING, BUT NOT LIMITED TO, IMPLIED WARRANTIES OF MERCHANTABILITY AND FITNESS FOR A PARTICULAR PURPOSE. You acknowledge that your use of this website / app is at your sole risk, that you assume full responsibility for all costs associated with use of this website / app, and that SKF shall not be liable for any direct, incidental, consequential, or indirect damages of any kind arising out of your access to, or use of the information or software made available on this website / app.

Any warranties and representations in this website / app for SKF products or services that you purchase or use will be subject to the agreed upon terms and conditions in the contract for such product or service.

Further, for non-SKF websites / apps that are referenced in our website / app or where a hyperlink appears, SKF makes no warranties concerning the accuracy or reliability of the information in these websites / apps and assumes no responsibility for material created or published by third parties contained therein. In addition, SKF does not warrant that this website / app or these other linked websites / apps are free from viruses or other harmful elements.

Third Party Services
When viewing YouTube content via the SKF website(s) (i.e. using YouTube API Services), you agree to be bound by the YouTube Terms of Service.

Copyright
Copyright in this website / app copyright of the information and software made available on this website / app rest with SKF or its licensors. All rights are reserved. All licensed material will reference the licensor that has granted SKF the right to use the material. The information and software made available on this website / app may not be reproduced, duplicated, copied, transferred, distributed, stored, modified, downloaded or otherwise exploited for any commercial use without the prior written approval of SKF. However, it may be reproduced, stored and downloaded for use by individuals without prior written approval of SKF. Under no circumstances may this information or software be supplied to third parties.

This website /app includes certain images used under license from Shutterstock, Inc.

Trademarks and Patents
All trademarks, brand names, and corporate logos displayed on the website / app are the property of SKF or its licensors, and may not be used in any way without prior written approval by SKF. All licensed trademarks published on this website / app reference the licensor that has granted SKF the right to use the trademark. Access to this website / app does not grant to the user any license under any patents owned by or licensed to SKF.

Changes
SKF reserves the right to make changes or additions to this website / app at any time.