PCIE-1803

8-ch, 24-bit, 128 kS/s Dynamic Signal Acquisition PCI Express Card

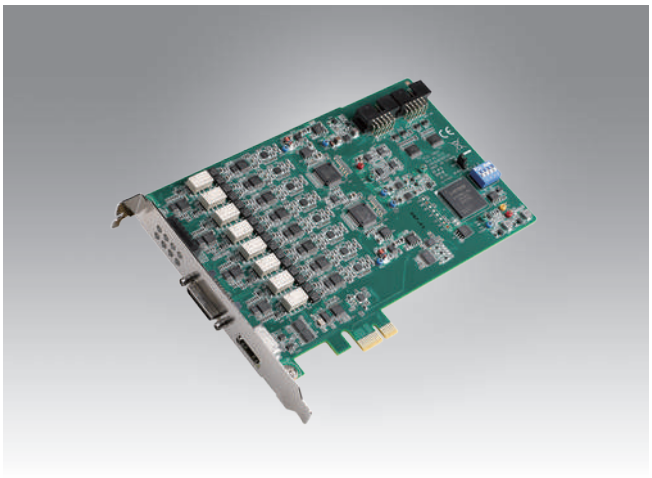

Features

- 8 simultaneously sampled analog inputs, up to 128 kS/s
- 24-bit resolution ADCs with -102 dB total harmonic distortion plus noise (THD+N)
- Wide input range of ±1 ~ 10 V
- Built-in anti-aliasing filter
- Low power consumption
- Software-selectable AC/DC coupling
- Full automatic calibration
- Multiple card synchronization
- Built-in software readable open-short indicator

Introduction

PCIE-1803 is a 24-bit, high-accuracy data acquisition PCI Express module specifically designed for sound and vibration-related applications. This module features built-in 2 mA excitation currents for IEPE sensors, such as accelerometers and microphones.

Specifications

Analog Input

Channels	8 (simultaneous sampling differential or 50 Ω pseudo-differential)
Resolution	24 bits (delta sigma)
Max. Sampling Rate	1kS/s to 128 kS/s (with resolution ≤ 1.09 mS/s)
Input Coupling	AC/DC, selectable per channel
AC Cut-Off Frequency	0.796 Hz (-3 dB)
Trigger Modes	Start, Delayed Start, Stop, Delayed Stop
Input Range	±1, ±2, ±5, ±10 V
Offset Error	< ±1 mV
Gain Error	< ±0.02 %
Total Harmonic Distortion (THD)	-113dB
Total Harmonic Distortion Plus Noise (THD+N)	-102dB
Dynamic Range	102dB
IEPE Excitation	2mA
Data Transfer	Direct memory access (DMA)
Multi-Card Support	For synchronizing more than 8 analog input channels
Sensor fault detection	Open/short/normal LED indicator for each channel, SW readable

Digital Input/Output

DI Channels	1 (interrupt)
DO Channels	2

General

Bus Type	PCI Express x1
I/O Connectors	36-pin mini SCSI (for analog input) HDMI (for clock, trigger, and DI/Os)
Dimensions (L x H)	168 x 100 mm (6.6" x 3.9")
Operating Temperature	0 ~ 70 °C (32 ~ 158 °F)
Storage Temperature	-40 ~ 80 °C (-40 ~ 176 °F)
Storage Humidity	5 ~ 95 % RH, non-condensing
Power Consumption	+3.3 V @ 300 mA typ./350 mA max. +12 V @ 200 mA typ./230 mA max.

Pin Assignments

Mini SCSI



HDMI

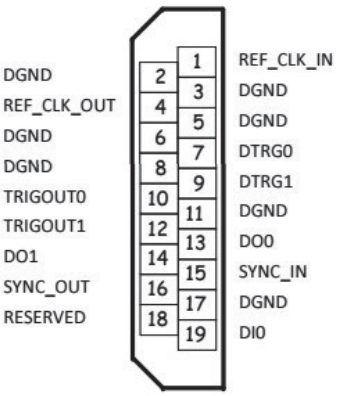

Ordering Information

PCIE-1803-A1E	8-ch, 24-bit, 128 kS/s Dynamic Signal Acquisition PCI Express Card
PCLD-8840-AE	20-pin DIN rail HDMI cable wiring board for PCIE-1802 and PCIE-1840
PCL-108BNC-50E	Mini SCSI to 8-BNC cable
PCL-10119-1E	HDMI cable for wiring board
1700030423-01	IDC 10 flat cable for Multi-card synchronization

All product specifications are subject to change without notice.

Last updated: 16-Jan-2025