OJE200

Through-beam sensor receiver

OJE-DPKG/SO/AS

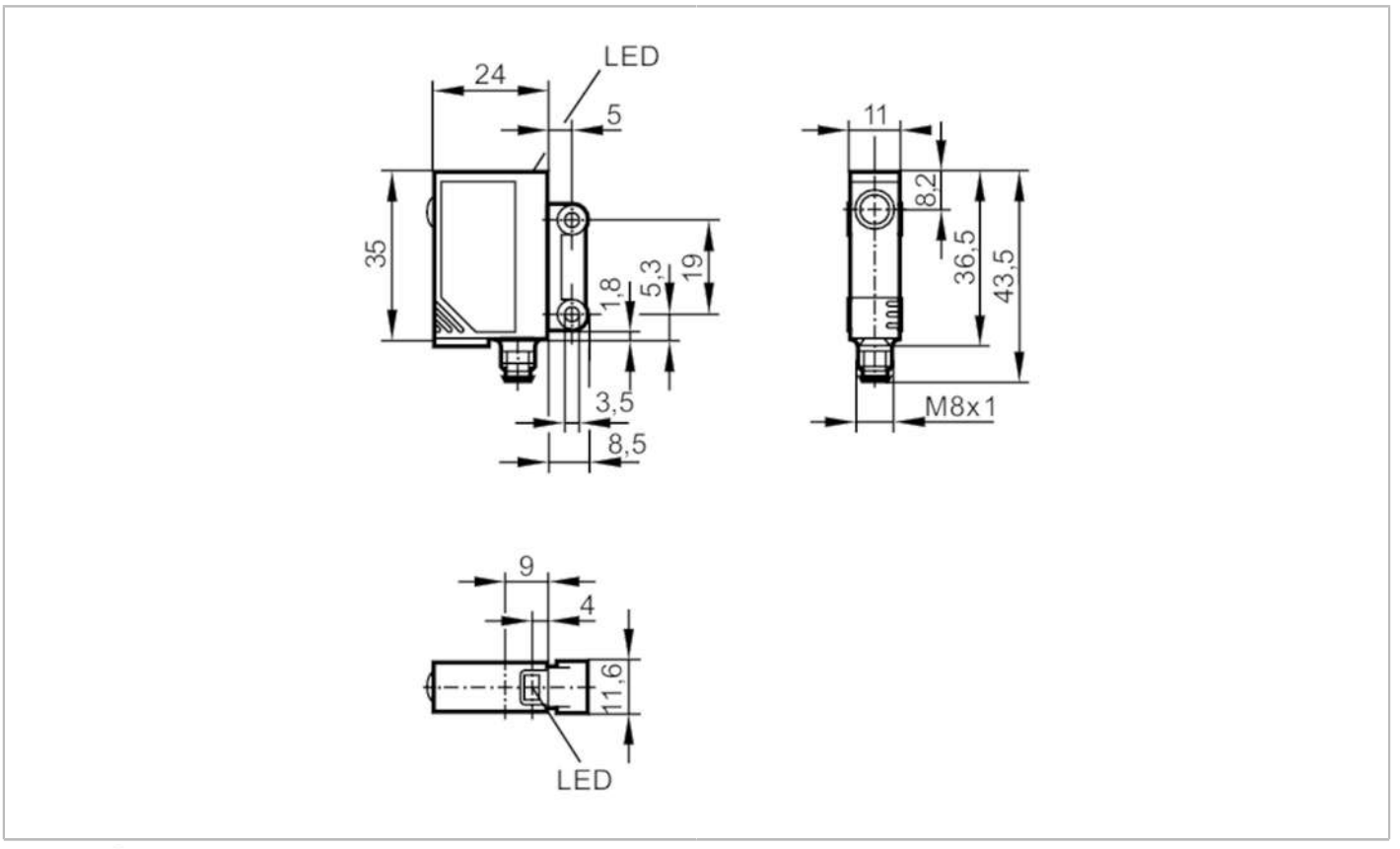

Product characteristics		
Housing		rectangular
Application		
Function principle		Through-beam sensor
Electrical data		
Operating voltage	[V]	10...30 DC
Current consumption	[mA]	< 10
Protection class		III
Reverse polarity protection		yes
Outputs		
Electrical design		PNP
Output function		dark-on mode
Max. voltage drop switching output DC	[V]	2.5
Permanent current rating of switching output DC	[mA]	200
Switching frequency DC	[Hz]	1000
Short-circuit protection		yes
Type of short-circuit protection		pulsed
Overload protection		yes

OJE200

Through-beam sensor receiver

OJE-DPKG/SO/AS

Detection zone			
Transmitter / receiver		receiver	
Range	[m]	< 10	
Range adjustable		no	
Operating conditions			
Ambient temperature	[°C]	-25...60	
Protection		IP 67	
Tests / approvals			
EMC		EN 60947-5-2	
MTTF	[years]	1152	
Mechanical data			
Weight	[g]	15	
Housing		rectangular	
Dimensions	[mm]	35 x 11 x 24	
Materials		ABS; SEPS	
Lens material		PMMA	
Lens alignment		side lens	
Displays / operating elements			
Display		switching status	1 x LED, yellow
Remarks			
Remarks		operating voltage "supply class 2" according to cULus	
Pack quantity		1 pcs.	

Electrical connection

Connector: 1 x M8; coding: A



Connection

