Rittal – The System.

Faster – better – everywhere.



Drehzahlregler EC
Speed control EC
Régulateur de vitesse de rotation EC
Toerentalregeling EC
Varvtalsregulator EC
Regolatore di velocità EC
Regulador de velocidad EC
回転速度コントローラ EC

3235.440

Montage-, Installations- und Bedienungsanleitung
Assembly and operating instructions
Notice d'emploi, d'installation et de montage
Montage- en bedieningshandleiding
Montage- och hanteringsanvisning
Istruzioni di montaggio e funzionamento
Instrucciones de montaje y funcionamento
取扱説明書

EN

Contents

1 Application 4

2 Safety notes 4

3 Assembly 4

4 Functional description 4
- 4.1 Temperature control 4
- 4.2 Fan detection 5
- 4.3 Monitoring/malfunctions 5
- 4.4 LEDs 6
- 4.5 Temperature sensor 6
- 4.6 Scope of supply 6

5 Electrical connection 6

6 Technical specifications 7

7 Guarantee 7

EN

1 Application

The SK 3235.440 is a microprocessor-controlled thermostat. This control unit was developed especially for controlling and monitoring the enclosure internal temperature via fans. Up to four fans may be controlled and monitored to generate the airflow required in order to maintain a prescribed enclosure internal temperature. Furthermore, energy consumption and noise levels can be reduced by controlling the fan speed.

The unit is compatible with Rittal EC fan-and-filter units with the article numbers: 3240.500, 3241.500, 3243.500, 3244.500 and 3245.XXX.

2 Safety notes

- Only use in a closed enclosure configuration.
- When installing the unit, observe the safety measures to EN 60 335.
- The general safety precautions and provisions must be observed.
- The operating instructions must be observed.
- The safety instructions for enclosure installation must be observed.
- The work must only be carried out by suitably trained, qualified personnel.
- Before making any modifications inside or to the enclosure (such as relocating or installing new components), it is vital to read and observe the assembly instructions (plant documentation).
- Any changes to the settings of the unit must only be made by trained, qualified personnel.
- Please do not lay the sensor and control cables parallel to other cables. Interference may lead to malfunctions in the controller.
- The operating temperature range must be observed (see “6 Technical specifications”, page 7).

3 Assembly

The unit may simply be snap-mounted on to the 35 mm support rail (EN 50 022).

4 Functional description

4.1 Temperature control

If the ambient temperature of the enclosure is below the setpoint, the control unit will regulate the enclosure internal temperature evenly to the prescribed setpoint. The current enclosure internal temperature is detected via a sensor. The actual value is compared with the setpoint (potentiometer 1). The current enclosure internal temperature is detected via a sensor. The actual value is compared with the setpoint (potentiometer 1). The fan speed is then controlled according to the temperature difference ascertained.

Within the temperature range “setpoint –6 K” to “setpoint +5 K”, the fan speed is infinitely variable via a PI control section. At higher temperatures, the fans will always operate at full speed. At lower temperatures, the fans are deactivated. At the lower end of the monitored temperature range, control is based on a hysteresis of 3 K.

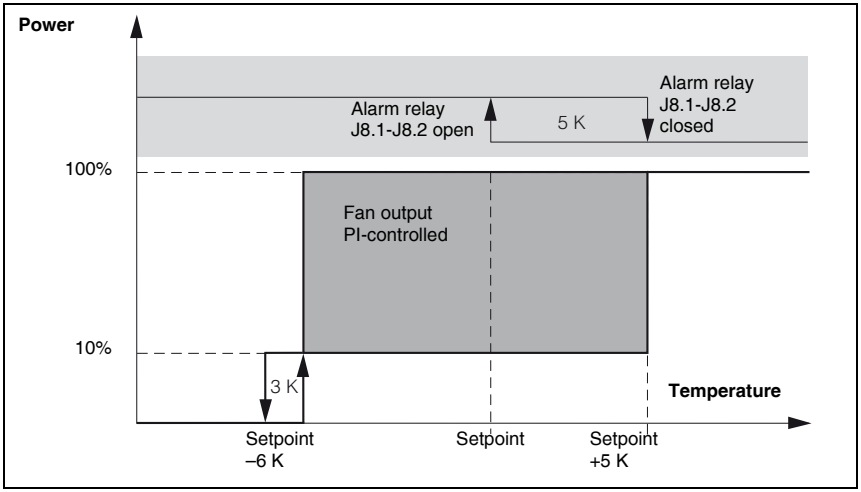

Abb. 1: Temperature control

4.2 Fan detection

After switching on for the first time, the control unit will automatically ascertain which fan outputs have fans connected to them. There are applications in which only one, two, three or four fans are connected. With several fans connected simultaneously, the speed is controlled identically for all fans (0 – 100%). Should a previously detected fan suddenly stop responding during operation, a warning message will be issued. If no fans at all are initially detected following commissioning, a warning message will likewise be generated.

4.3 Monitoring/malfunctions

During normal operation, contact J8.1-J8.2 of the alarm relay is open.

Overtemperature

At a measured temperature of more than 5 K above the setpoint, temperature monitoring will cut in (see diagram). The red LED is illuminated. The fault alarm relay drops out (contact J8.1-J8.2 closed). The overtemperature warning is cancelled as soon as the measured temperature drops back below the setpoint.

Fan-and-filter unit failure

If the speed of one of the fans drops to zero, the fault alarm relay will drop out (contact J8.1-J8.2 closed) and the red LED will flash continuously (ON/OFF for 0.5 sec. each).

EN

Line break to fan

Rapid intermittent double flashing of the red LED. The fault alarm relay drops out (contact J8.1-J8.2 closed).

Sensor break/short-circuit

If a temperature sensor break is detected, the fans will run at full speed. Rapid intermittent triple flashing of the red LED.
The fault alarm relay drops out (contact J8.1-J8.2 closed).

System error

In the event of a system error, the control unit resets itself automatically. If the control unit is unable to execute the program normally, all the connected fans are set to maximum speed. The red LED is continuously illuminated. The fault alarm relay-drops out (contact J8.1-J8.2 closed).

4.4 LEDs

Green= Operating voltage applied
Red = Malfunction,
see “4.3 Monitoring/malfunctions”, page 5

4.5 Temperature sensor

The sensor may be extended to a maximum of 50 m using a two-wire cable (suitable for 230 V); it can also be shortened. Cable routing parallel to live cables should be avoided, to prevent interference.

4.6 Scope of supply

Qty.	Designation
1	Thermostat
1	Temperature sensor, L = 1.8 m
1	Assembly instructions

Tab. 1: Scope of supply

5 Electrical connection

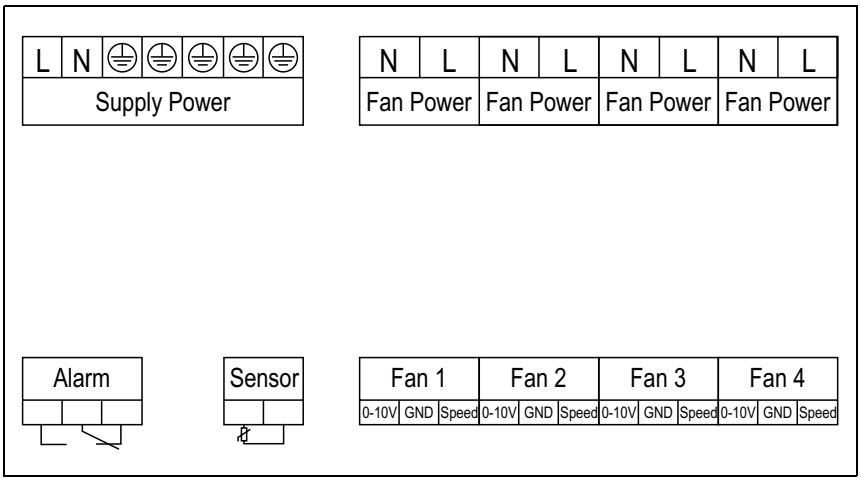

Abb. 2: Electrical connection

EN

6 Technical specifications

Model No.	3235.440
Operating voltage and operating current	100 V – 250 V/AC, < 8 mA without fan
Setting range, temperature (P1)	5…55°C 41…131°F
Fan speed	10% – 100%
Temperature sensor	NTC, 10 kΩ at 25°C, β 3977K cable length 1.8 – 2 m
Control	PI
Alarm	Relay, changeover contact; Contact rating 24/24 V DC/100 – 230 V AC, 2 A (cos φ = 1) load
Level of contamination	2
EMC immunity	IEC 61 000-6-2
EMC interference emission	IEC 61 000-6-4
Protection category	IP 20
Operating temperature	–40°C…+55°C
Storage temperature	–40°C…+70°C
Humidity	10 – 95%
Operating air pressure	80 kPa – 108 kPa (2000 m)
Connection	Spring clamp terminals 0.8...1.5 mm^2 (Cage Clamp terminal strip)
Mounting	Onto 35 mm support rail (EN 50 022)
Enclosure	Polycarbonate, UL 94 V-0
Dimensions	W x H x D: 163 x 57.6 x 90 mm

Tab. 2: Technical specifications

Caution!
This is a Class A device.
This device may cause radio interference in a domestic environment.
In this event, the operator may be required to take corrective actions.

7 Guarantee

The manufacturer will provide a one-year guarantee from the date of delivery on this unit, subject to proper usage.
However, the guarantee will become null and void in the event of improper usage or connections. We will not be liable for any damages arising in such cases.

Rittal – The System.

Faster – better – everywhere.

- Enclosures
- Power Distribution
- Climate Control
- IT Infrastructure
- Software & Services

4th edition 03/2015 / ID no. 328 474 / Drawing no. A4522500SK 23

RITTAL GmbH & Co. KG
Postfach 1662 · D-35726 Herborn
Phone +49(0)2772 505-0 · Fax +49(0)2772 505-2319
E-mail: info@rittal.de · www.rittal.com