BExBG15 Explosion Proof Xenon Beacon 15 Joule

The flameproof BExBG15 15 Joule, 468 candela Xenon beacons are suitable for Zone 1, 2, 21 & 22 applications. Approved to IECEx, ATEX, Ex EAC and INMETRO standards. Available as SIL 1 and SIL 2 compliant.

The BExBG15 15 Joule Xenon strobe beacons robust construction enables installation in the harshest of environments. Additional features include automatic synchronisation on multi-beacon systems and stainless steel guard and mounting bracket as standard.
The explosion proof Ex d BEx range features enclosures manufactured from corrosion proof, marine grade copper free LM6 aluminium with a chromate and powder coat finish. All models have two M20 cable entries, large termination areas containing in & out terminals and an ingress protection of IP66/67.

Features

- Marine grade, corrosion proof, LM6 aluminium enclosure
- Automatic synchronisation on multi-beacon system.
- Beacons can be set to 'flip-flop' alternating mode with other units on multi-beacon systems.
- Xenon tubes mechanically secured against shock & vibration
- Glass lens & Stainless Steel guard
- Very large termination area.
- Dual M20 cable entries – adaptors available.
- Stopping plug included.
- Ratchet adjustable stainless steel 'U' bracket.
- Reverse polarity diode fitted.
- IP66/67 ingress protection.
- 468 candela effective light intensity.
- UV stable PC, field replaceable, colour lens filter.



Approvals

- IECEx KEM 10.0002X
- ATEX KEMA 00ATEX2006X
- TR-CU Ex EAC certificate: RU C-GB.AA71.B.00109
- SIL 1 and SIL 2 compliant to IEC 61508 (2010)
- INMETRO certificate: 10-IEx-0010

Coding

- II 2G Ex d IIC T4 Gb Ta. -50°C to +50°C
- II 2G Ex d IIC T3 Gb Ta. -50°C to +70°C
- II 2D Ex tb IIIC T120°C Db Ta. -50°C to +40°C
- II 2D Ex tb IIIC T135°C Db Ta. -50°C to +55°C
- II 2D Ex tb IIIC T150°C Db Ta. -50°C to +70°C



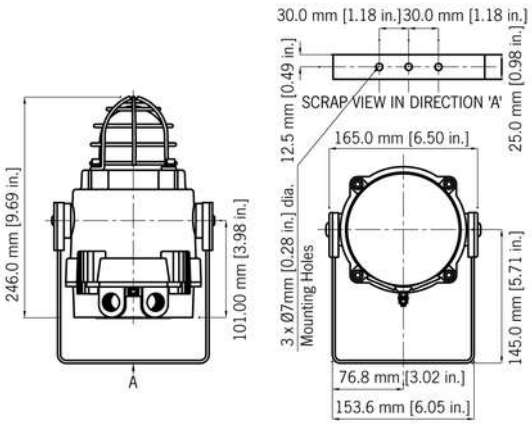

Specification

Energy:	15 Joules (15Ws)
Flash rate:	1Hz (60 fpm)
Peak Candela:	1,500,000 cd – calculated from energy (J)
Eff. Intensity cd:	750 cd – calculated from energy (J)
Peak Candela:	99,106 cd* – measured ref. to I.E.S.
Eff. Intensity cd:	468 cd* – measured ref. to I.E.S.
Lens colours:	Amber, Blue, Clear, Green, Magenta, Red & Yellow
Voltages DC:	24vdc; 48vdc
Voltages AC:	115vac; 230vac
Ingress protection:	BG15D : IP66/67 BG15E : IP66
Enclosure matl:	Marine grade copper free LM6 Aluminium
Enclosure finish:	Chromate & powder coated finish – anti-corrosion.
Colour:	RAL3000 Red (others available on request)
Cable entries:	Dual M20 ISO (one stopping plug inc)
Terminals:	0.5 – 2.5mm² (20-14 AWG)
Enclosure volume:	<2 litres
Line monitoring:	Blocking diode included EOL Min. 500 Ohm 2w, or 3k3 Ohm 0.5w resistor or diode (DC versions) can be fitted
Grounding stud:	M5
Temperature range:	-50° to +70°C (-58°F to +158°F)
Relative humidity:	95% – Additional tropicalisation is recommended for applications where both high relative humidity and high ambient temperatures exist
Tube life:	Emissions are reduced to 70% after 5 million flashes
Weight:	DC:2.45kg/5.39lbs AC: 2.75kg/6.05lbs

*All candela data is representative of performance with clear lens at optimum voltage.

Part Codes

Version:	Part code:	Description:
Product type:	BExBG15	Explosion proof 15J Xenon Strobe Beacon
Type:	DP	Ex d, UV stable PC Colour Lens
Voltage:	DC024	24V dc
	DC048	48V dc
	AC115	115V ac
	AC230	240V ac
Cable Entry Type: [e]	A	2 x M20x1.5mm
	B	2 × 1/2" NPT – adaptors
	C	2 × 3/4" NPT – adaptors
	D	2 x M25x1.5mm – adaptors
	E	1 × 1/2" NPT – adaptor
	F	1 × 3/4" NPT – adaptor
	G	1 x M25x1.5mm – adaptor
Adaptor/Stopping plug material: [m]	B	Brass
	N	Nickel Plated
	S	Stainless Steel
Bracket/guard matl & tag: [s]	1	A2 304 Stainless Steel
	2	A4 316 Stainless Steel
	3	A2 304 St/St with Equip. Tag
	4	A4 316 St/St with Equip. Tag
Product version: [v]	A1	Default – IECEx, ATEX, Ex EAC & INMETRO – SIL1
	S1	IECEx, ATEX, Ex EAC & INMETRO – SIL2: 24Vdc only
Enclosure colour: [x]	R	Red RAL3000
	S	Special – contact E2S
Lens colour: [y]	A	Amber
	B	Blue
	C	Clear
	G	Green
	M	Magenta
	R	Red
	Y	Yellow
Accessories:	SP65-0001-A2	Pole Mount Bracket Kit 2" St/St A2 (304)
	SP65-0001-A4	Pole Mount Bracket Kit 2" St/St A4 (316)
	SP65-0003-A2	Sunshade – St/St A2 (304)
	SP65-0003-A4	Sunshade – St/St A4 (316)

Current Consumption

Version:	Voltage:	Current:
24V dc	20-28V dc	860mA
48V dc	42-54V dc	480mA
115V ac 50Hz/60Hz	+/-10%	360mA
230V ac 50Hz/60Hz	+/-10%	170mA

No liability is accepted for any consequence of the use of this document. The technical specification of this unit is subject to change without notice due to our policy of continual product development. All dimensions are approximate. This unit is sold subject to our standard conditions of sale, a copy of which is available on request.