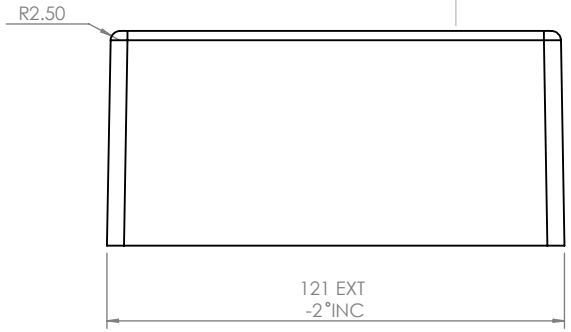

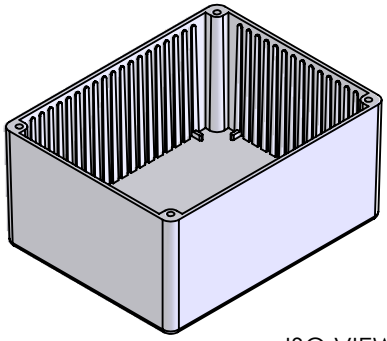

ISO VIEW
1:3

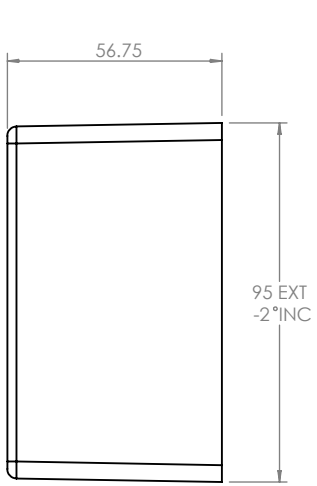

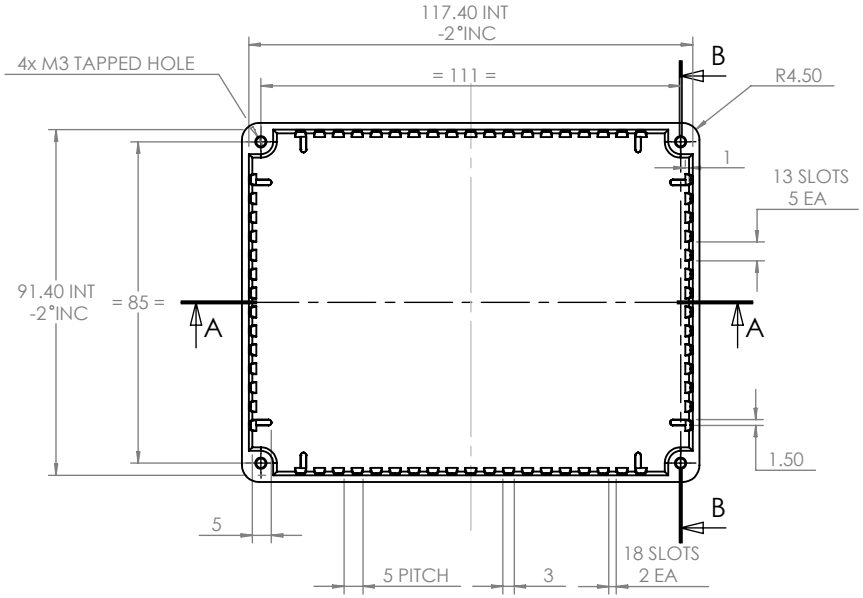

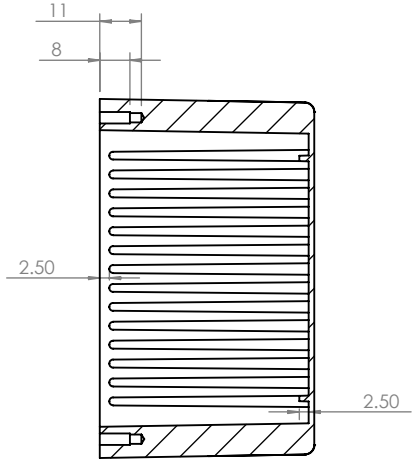

SECTION B-B

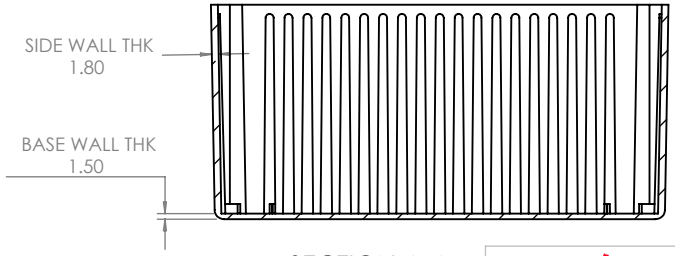

SECTION A-A

CAMDENBOSS
ELECTRONICS & ENCLOSURES
JAMES CARTER RD, MILDENHALL, SUFFOLK, IP28 7DE
TEL: 01638 716101 FAX: 01638 716554
EMAIL: Sales@CamdenBoss.com
WEB: www.CamdenBoss.com

UNLESS OTHERWISE SPECIFIED:
DIMENSIONS ARE IN MILLIMETERS

DO NOT SCALE DRAWING

REVISION. O

TITLE:

DRG FOR 5007 BOX

FINISH.
SMOOTH

	NAME	SIGNED	DATE
DRAWN	S.HARDINGE	SJH	07/12/05
CHK'D	-	-	-

MATERIAL.
DIE-CAST ALUMINIUM

DWG NO. 5007 Box

A4

PROJECTION.

SCALE. 1 : 2

SHEET 1 OF 1