Universal Mounts - Type CGM





Applications

- Engines
- Radiators
- Cabs
- General Isolation

The CGM range of Mounts provide excellent fail-safe dynamic insulation, particularly in the vertical direction.

They significantly reduce vibrations and absorb considerable levels of shocks to provide an excellent all-round solution to a wide range of applications on agricultural machines, tractors, off-road machines and military equipment.

When installed in pairs, they are excellent in insulating structures where through assembly is required by isolating the application in both traction and compression.

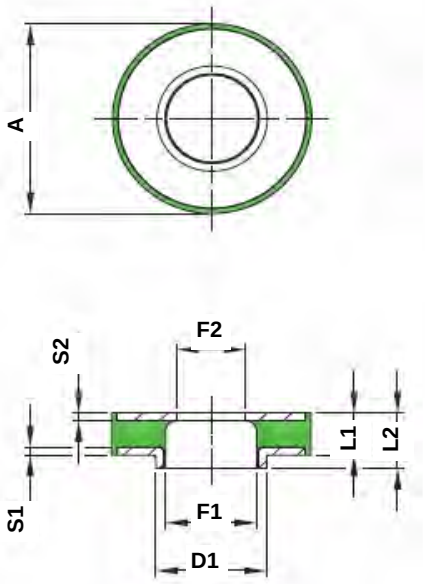

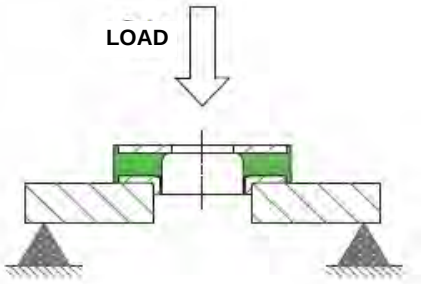

RS Ref:	Fibet Ref:	Hardness (IRHD)	A	D1	F1	F2	L1	L2	S1	S2	Average Stiffness (daN/mm)	Maximum Load (daN)	Maximum Deflection (mm)
720-3423	CGM3614-W	45	36	18	12.0	8.5	10	14	1.5	1.5	70.0	84.0	1.2
720-3427	CGM3614-M	60	36	18	12.0	8.5	10	14	1.5	1.5	110.0	132.0	1.2
720-3436	CGM3614-H	70	36	18	12.0	8.5	10	14	1.5	1.5	170.0	204.0	1.2
720-3439	CGM5023-W	45	50	23	20	16.5	13	22.5	1.5	1.5	80.0	120.0	1.5
720-3433	CGM5023-M	60	50	23	20	16.5	13	22.5	1.5	1.5	140.0	210.0	1.5
720-3442	CGM5023-H	70	50	23	20	16.5	13	22.5	1.5	1.5	210.0	315.0	1.5
720-3445	CGM6023-W	45	60	27	24	20.5	13	23.5	1.5	1.5	110.0	209.0	1.9
720-3449	CGM6023-M	60	60	27	24	20.5	13	23.5	1.5	1.5	210.0	399.0	1.9
720-3458	CGM6023-H	70	60	27	24	20.5	13	23.5	1.5	1.5	310.0	589.0	1.9