C3006101

SNAPTEC 60 x 100

Top and base parts are fitted together using a unique snap-in machanism. Fixing towers in top and base part. Recessed area for membrane keyboards. Simple, invisible wall-mounting in pre-moulded shafts within the base part.

Supply
1 top and base part with sealing, covers for the locking openings, dismantling key



TECHNICAL DATA

Material	ABS (UL 94 HB)
Protection class	IP 65
Colour	light grey RAL 7035
Standards	RoHS compliant, REACH compliant

The degree(s) of protection listed refer to the empty standard enclosures (without any modifications) and are in compliance with the EN 60529 standard.

Length	60 mm
Width	100 mm
Height	40 mm
PCB length, base	52 mm
PCB width, base	69 mm
PCB length, top	50 mm
PCB width, top	68 mm
Keypad length	49.1 mm
Keypad width	69.8 mm

Please take the dimensions from current parts. These are subject to material- and manufacturing-specific tolerances.

PURCHASING DATA

Weight/1 part	75 g
Customs tariff number (OKW product)	39269097
Country of manufacture	Germany

C3006101

SNAPTEC 60 x 100

CUSTOMISING OPTIONS

What else do you need to create your own personal product? We can supply our enclosures and tuning knobs fully modified to suit your electronic components and design requirements. Please advise for anything else we can do for you.

Customising options for C3006101



Machining



Lacquering



Printing



Laser marking



Decor foils



Special material



EMC shielding



Installation / Assembly of accessories

C3006101

SNAPTEC 60 x 100

ACCESSORY "PROTECTION"



C2306917
Pressure equalisation element
M6x0.75
PA 6 (UL 94 HB)
light grey RAL 7035
IP 56



C2310917
Pressure equalisation element
M10x1
PA 6 (UL 94 HB)
light grey RAL 7035
IP 56



C2316147
Cable grommet
TPE
light grey RAL 7035
IP 67

ACCESSORY "WALL/HOLDER"



C2299028
Wall mounting brackets
PA 6 (UL 94 HB)
light grey RAL 7035

ACCESSORY "SCREWS"



A0306031
Self-tapping screws 3 x 6 mm
(PZ1)

Subject to technical modification without notice. © by OKW Gehäusesysteme, Buchen/Germany.

Deckel
Innenansicht

top part
inside view

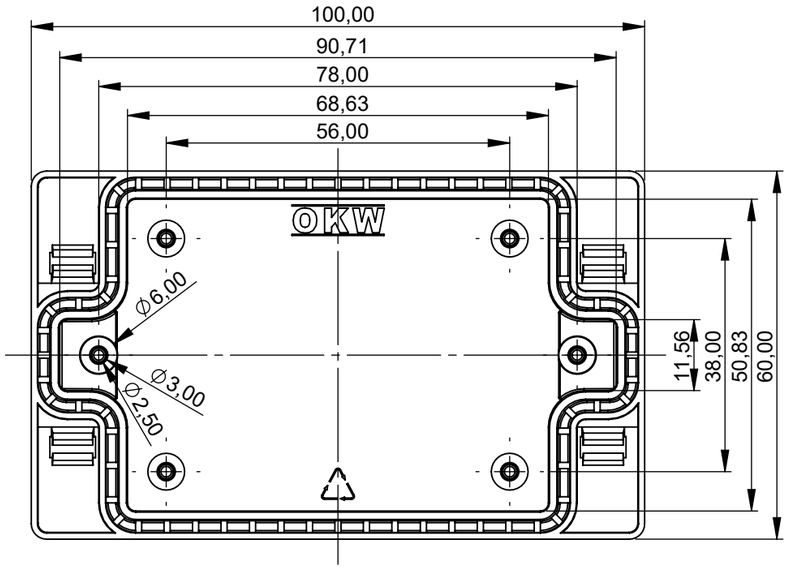

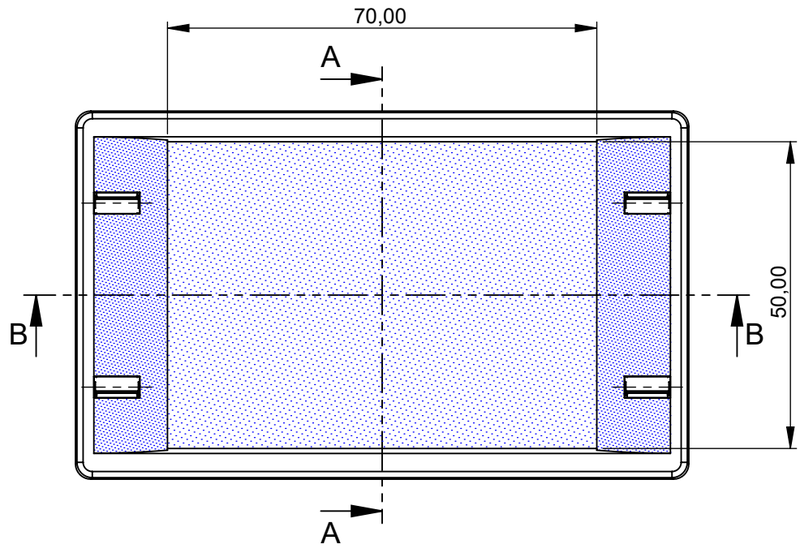

Schnitt A-A

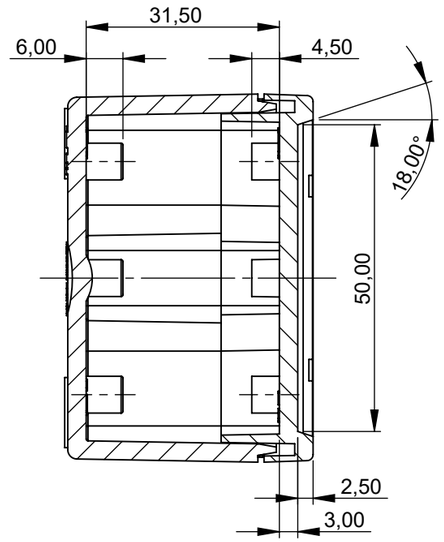

Unterteil
Innenansicht

base part
inside view

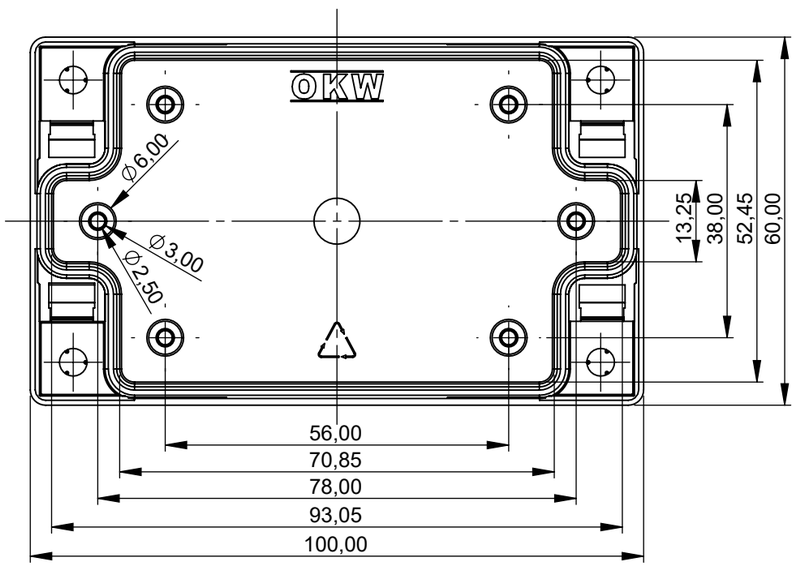

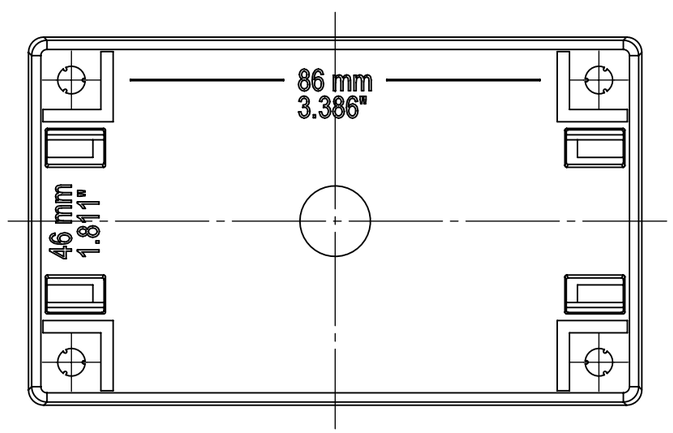

Schnitt B-B

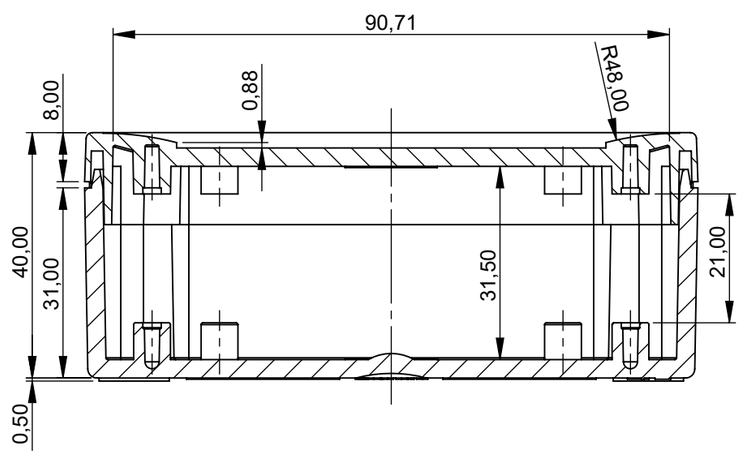

Bitte die Maße an aktuellen Teilen abnehmen.
Diese unterliegen material- und produktionsspezifischen Fertigungstoleranzen.

Please take the dimensions from current parts.
These are subject to material- and manufacturing-specific tolerances.

Informationskopie
wird nicht aktualisiert
Copy for Information
will not be updated

Technische Änderungen vorbehalten. Irrtümer oder Druckfehler begründen keinen Anspruch auf Schadenersatz. Wichtige Einbaumaße bitte direkt mit dem aktuellen Produkt abstimmen.

Subject to technical modification without prior notice. Typographical and other errors do not justify any claim for damages. All dimensions should be verified using an actual moulded part.

Sous reserve de modifications techniques. Toute erreur ou faute d'impression ne justifie aucune demande d'indemnisation. Nous prions les clients de verifer les dimensions des composants avec les boitiers avant le montage.

Erst. am:	15.06.2022
Erst. von:	D. Hasselbach
Freig. am:	
Freig. von:	
Revision:	01

OKW GEHÄUSE SYSTEME

Toleranzen: DIN 16901 T130	Status: ENTWICKLUNG	DIN 6 Teil 2
Volumen:	Zeichnungsart: KUNDE	

This document contains proprietary information of OKW Gehäusesysteme GmbH and is tendered subject to the conditions that the information be retained in confidence not be reproduced or copied and not be used or incorporated in any product.

SNAPTEC
Case complete, 60x100

C3006101

M 1:1

Für dieses Dokument behalten wir uns alle Urheberrechte vor. Es darf auch auszugsweise weder vervielfältigt noch Dritten in irgendeiner Form zugänglich gemacht werden.

Dateiname: 00007974