MURR ELEKTRONIK
stay connected

T-coupler M12-male 5p. / 2x M12-female 4p. Replaced Art.-No. 13880

T-coupler M12 ? M12
5-pole
Distribution function (NO)

Image



Vicarious picture

Form	
	41121
Technical Data	
Operating voltage	max. 60 V AC/DC
Operating current per contact	max. 4 A
Locking of ports	Screw thread M12 × 1 mm (recommended torque 0.6 Nm) self-securing
Protection	IP65 and IP67 when plugged and screwed down (EN 60529)
Temperature range	-25...+85 °C
Commercial data	
Net weight	30
Weight unit	Gram
Basic unit	pc.
Customs tariff number	85369010
Unit (piece)	1
Minimum order quantity (piece)	1
Comments	
	Plastic housings with good resistance against chemicals and oils. The resistance to aggressive media should be individually tested for your application. Further details on request.

All data on this data sheet was compiled carefully.
Liability regarding correctness, completeness, and actuality is limited to gross negligence. Created: 01/14

Contact layout

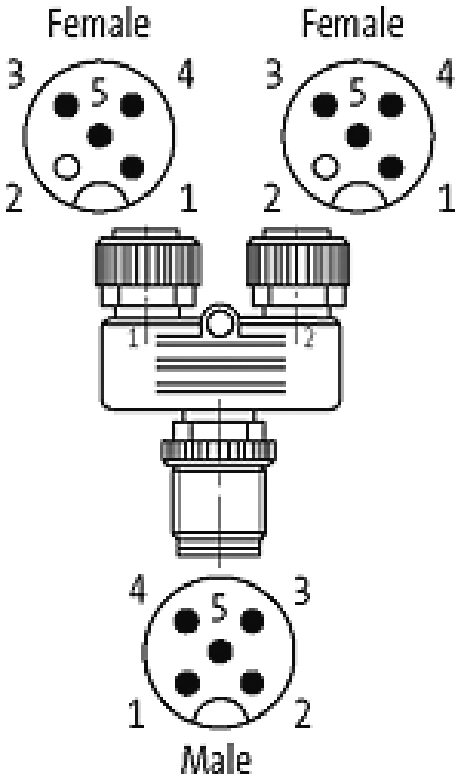

Circuit diagram

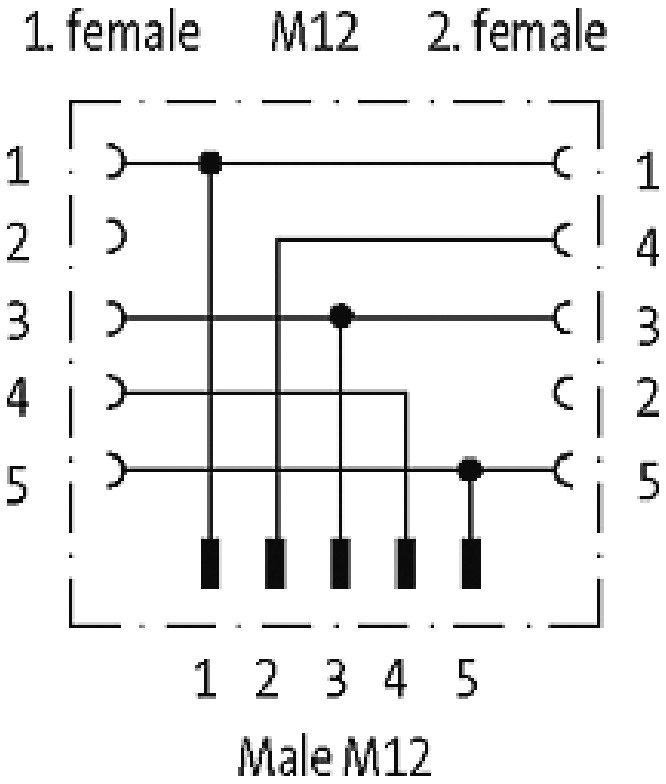

Dimension drawing

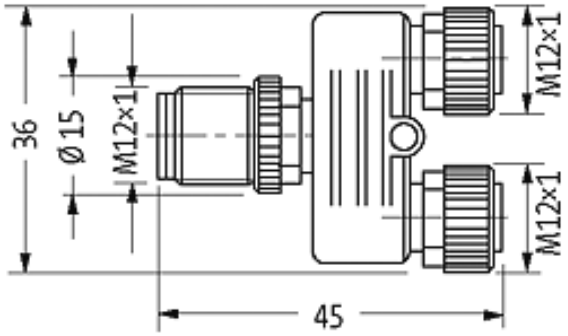

All data on this data sheet was compiled carefully.
Liability regarding correctness, completeness, and actuality is limited to gross negligence. Created: 01/14