E11293

Adapter plug

ESTGH040MSS0,05E04 (M20)

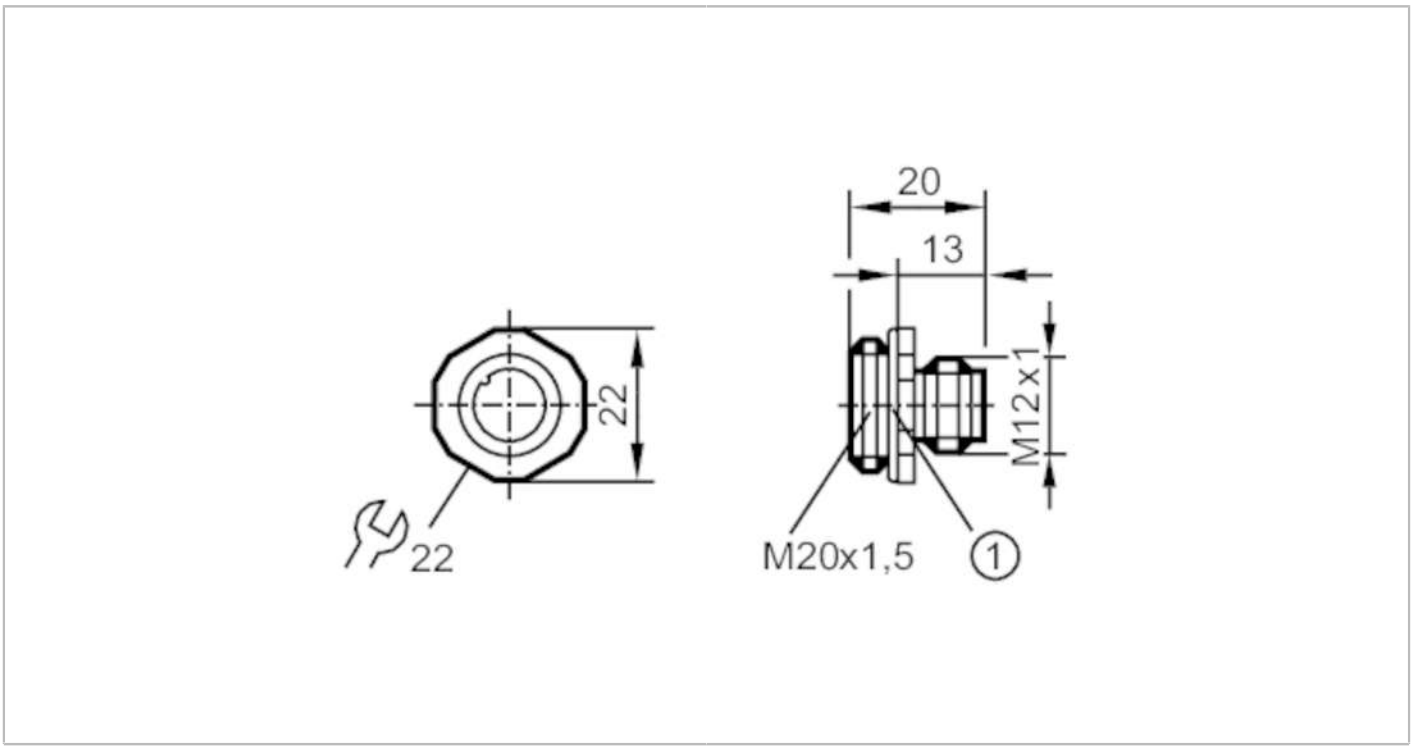

Electrical data		
Operating voltage	[V]	< 250 AC/DC
Operating conditions		
Ambient temperature	[°C]	-25...85
Protection		IP 68
Mechanical data		
Weight	[g]	22.6
Mounting thread		M20
Materials		brass nickel-plated
Moulded-body material		brass, nickel-plated
Remarks		
Pack quantity		1 pcs.
Electrical connection		

Cable: 0.05 m, PVC; 4 x 0.25 mm²

Electrical connection - plug

Connector: 1 x M12, straight; coding: A; Moulded body: brass, nickel-plated

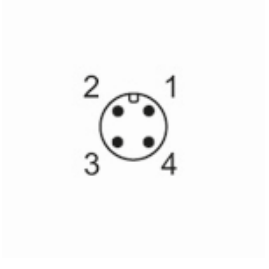

E11293

Adapter plug

ESTGH040MSS0,05E04 (M20)

Connection

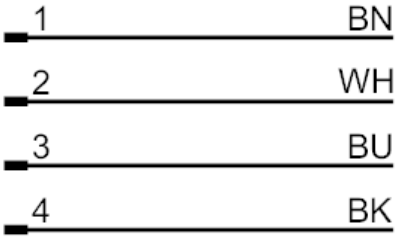

	Core colours :
BK =	black
BN =	brown
BU =	blue
WH =	white