MURR ELEKTRONIK
stay connected

M12 female receptacle X coded rear mount solder

Ethernet CAT6A
Mounting nut
Flange M12 female
8-pole, shielded
Solder connection
Rear mounting

Link to Product

Illustration



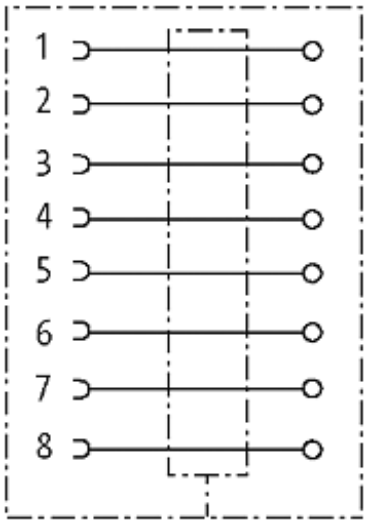

The information in this brochure has been compiled with the utmost care.
Liability for the correctness completeness and topicality of the information is restricted to gross negligence. Version: 02/16

MURR ELEKTRONIK
stay connected

Female

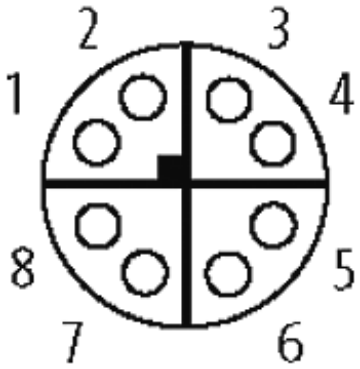

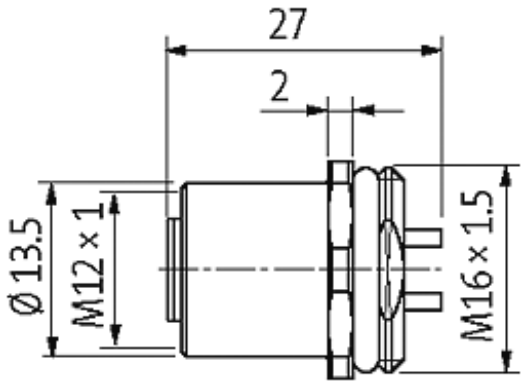

Product may differ from Image

Form	
Form	21161
Technical Data	
Operating voltage	max. 50 V AC/60 V DC
Operating current per contact	max. 0.5 A
Transfer parameters	CAT6, class EA (ISO/IEC 11801:2002), (EN 50173-1)
Transfer rate	10 Gbit/s
Locking of ports	Screw thread M12 × 1 mm (recommended torque 0.6 Nm) self-securing
Protection	IP67 inserted and tightened (EN 60529)
Housing	CuZn, nickel plated
General data	
Temperature range	-40...+85 °C
Commercial data	
country of origin	DE
customs tariff number	85369010
minimum order quantity	1

The information in this brochure has been compiled with the utmost care.
Liability for the correctness completeness and topicality of the information is restricted to gross negligence. Version: 02/16