RM3010

Absolute multiturn encoder with hollow shaft

RMO12BRU41312bPRN

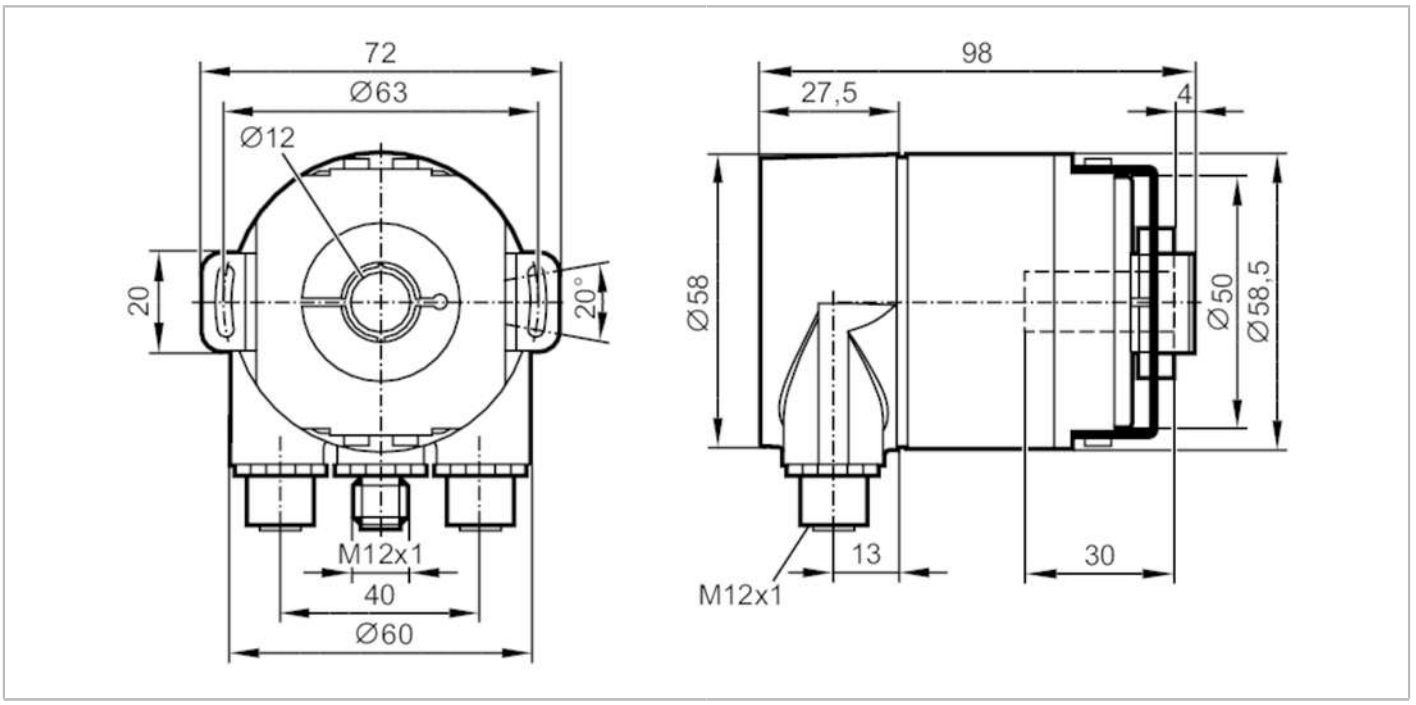

Product characteristics		
Resolution		8192 steps; 4096 revolutions; 25 bit
Communication interface		ProfiNet-IO; PROFINET encoder profile V4.2
Shaft design		hollow shaft open to one side
Shaft diameter	[mm]	12
Application		
Function principle		absolute
Revolution type		multiturn
Electrical data		
Operating voltage	[V]	10...30 DC
Current consumption	[mA]	100; ((24 V))
Reverse polarity protection		yes
Outputs		
Short-circuit protection		yes
Code		binary
Measuring/setting range		
Resolution		8192 steps; 4096 revolutions; 25 bit
Accuracy / deviations		
14 - 16 Bits		
Accuracy	[°]	0.0439
<13 Bits		
Accuracy	[°]	0.022

RM3010

Absolute multiturn encoder with hollow shaft

RMO12BRU41312bPRN

Software / programming		
Parameter setting options		resolution per revolution; total resolution; direction of rotation; preset value; provision of a speed value; IP address; MRP; MRPD; rotational axis
Addressing		Software
Interfaces		
Communication interface		ProfiNet-IO; PROFINET encoder profile V4.2
Operating conditions		
Ambient temperature	[°C]	-40...85
Storage temperature	[°C]	-40...85
Max. relative air humidity	[%]	98; (condensation not permissible)
Protection		IP 67; (on the housing: IP 67; on the shaft: IP 67)
Tests / approvals		
Shock resistance	DIN EN 60068-2-27	100 g (6 ms) / half-sine
Continuous shock resistance	DIN EN 60068-2-29	10 g (16 ms) / half-sine
Vibration resistance	DIN EN 60068-2-6	20 g (20...1000 Hz)
MTTF	[years]	95
Mechanical data		
Weight	[g]	601
Dimensions	[mm]	Ø 58.5 / L = 98
Materials		aluminium; clamping ring: brass
Max. revolution, mechanical	[U/min]	3000
Shaft design		hollow shaft open to one side
Shaft diameter	[mm]	12
Shaft material		steel (1.4104)
Max. shaft load axial (at the shaft end)	[N]	40
Max. shaft load radial (at the shaft end)	[N]	110
Fixing flange		Stator coupling

Electrical connection - Ethernet

Connector: 1 x M12; coding: D



1	Tx +
2	Rx +
3	Tx -
4	Rx -

RM3010

Absolute multiturn encoder with hollow shaft

RMO12BRU41312bPRN

Electrical connection - power supply

Connector: 1 x M12; coding: A

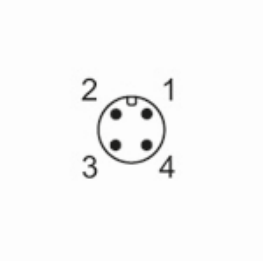

1	10...30 V DC
2	not used
3	GND 0 V
4	not used